OPERATION AND PARTS MANUAL

MULTIQUIP®

WHISPERWATT™ SERIES
MODEL DCA25SSIU3
60HZ GENERATOR
(ISUZU BV-4LE2 DIESEL ENGINE)

USED WITH MLT25 SERIES LIGHT TOWER ONLY

PARTS LIST NO. M1870301004C

Revision #1 (01/24/13)

To find the latest revision of this publication, visit our website at: www.mqpower.com

THIS MANUAL MUST ACCOMPANY THE EQUIPMENT AT ALL TIMES.

PN 49810

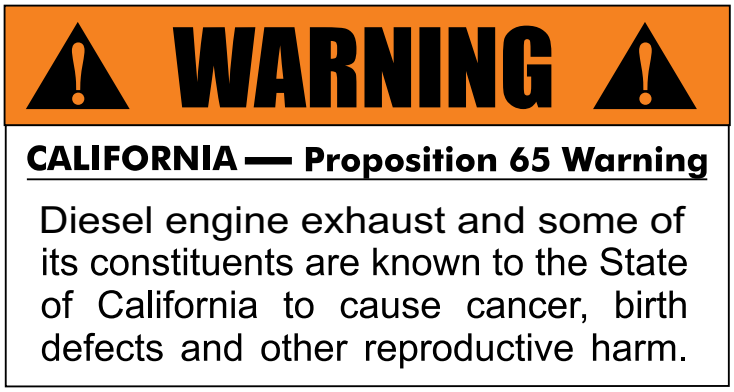
WARNING
CALIFORNIA — Proposition 65 Warning
Diesel engine exhaust and some of its constituents are known to the State of California to cause cancer, birth defects and other reproductive harm.

If you believe that your vehicle has a defect that could cause a crash or could cause injury or death, you should immediately inform the National Highway Traffic Safety Administration (NHTSA) in addition to notifying Multiquip at 1-800-421-1244.

If NHTSA receives similar complaints, it may open an investigation, and if it finds that a safety defect exists in a group of vehicles, it may order a recall and remedy campaign. However, NHTSA cannot become involved in individual problems between you, your dealer, or Multiquip.

To contact NHTSA, you may either call the Vehicle Safety Hotline toll-free at 1-888-327-4236 (TTY: 1-800-424-9153), go to http://www.nhtsa.dot.gov; or write to:

Administrator
NHTSA
1200 New Jersey Avenue S.E.
Washington, DC 20590

You can also obtain information about motor vehicle safety from http://www.safecar.gov.

DCA25SSIU3 Generator
(with MLT25 Series Light Tower)

Proposition 65 Warning 2
Reporting Safety Defects..... 3
Table Of Contents..... 4
Parts Ordering Procedures..... 5
Safety Information 6-11
Specifications 12
Dimensions..... 13
Installation 14-15
General Information..... 16
Major Components 17
Generator Control Panel..... 18
Engine Operating Panel..... 19
Output Terminal Panel Familiarization 20-22
Load Application..... 23
Generator Outputs..... 24-25
Output Terminal Panel Connections 26-27
Inspection/Setup..... 28-31
Generator Start-Up Procedure 32-33
Generator Shut-Down Procedures 34
Maintenance..... 35-37
Generator Wiring Diagram..... 38
Engine Wiring Diagram..... 39
Troubleshooting (Generator)..... 40
Explanation Of Code In Remarks Column..... 42
Suggested Spare Parts 43

Component Drawings

Generator Assy. 44-45
Control Box Assy..... 46-49
Engine And Radiator Assy. 50-53
Output Terminal Assy. 5-55
Battery Assy..... 56-57
Muffler Assy. 58-59
Fuel Filter Assy. 60-61
Enclosure Assy. 62-65
Rubber Seals Assy..... 66-67
Nameplate And Decals Assy. 68-69
Terms And Conditions Of Sale — Parts 70

www.multiquip.com

Ordering parts has never been easier!
Choose from three easy options:

Effective:
January 1st, 2006

Best Deal!

Order via Internet (Dealers Only):
Order parts on-line using Multiquip's SmartEquip website!

- View Parts Diagrams
- Order Parts
- Print Specification Information

If you have an MQ Account, to obtain a Username and Password, E-mail us at: **parts@multiquip.com.**

To obtain an MQ Account, contact your District Sales Manager for more information.

Goto www.multiquip.com and click on Order Parts to log in and save!

Use the ***internet*** and qualify for a **5% Discount** on *Standard orders* for all orders which include complete part numbers.*

Note: Discounts Are Subject To Change

Order via Fax (Dealers Only):
All customers are welcome to order parts via Fax.
Domestic (US) Customers dial:
1-800-6-PARTS-7 (800-672-7877)

Fax your order in and qualify for a **2% Discount** on *Standard orders* for all orders which include complete part numbers.*

Note: Discounts Are Subject To Change

Order via Phone: **Domestic (US) Dealers Call:**
1-800-427-1244

Non-Dealer Customers:
Contact your local Multiquip Dealer for parts or call 800-427-1244 for help in locating a dealer near you.

International Customers should contact their local Multiquip Representatives for Parts Ordering information.

When ordering parts, please supply:

- ❒ **Dealer Account Number**
- ❒ **Dealer Name and Address**
- ❒ **Shipping Address (if different than billing address)**
- ❒ **Return Fax Number**
- ❒ **Applicable Model Number**
- ❒ **Quantity, Part Number and Description of Each Part**
- ❒ **Specify Preferred Method of Shipment:**
  - ✓ UPS/Fed Ex
    - Priority One
    - Ground
    - Next Day
    - Second/Third Day
  - ✓ DHL
  - ✓ Truck

NOTICE

All orders are treated as *Standard Orders* and will ship the same day if received prior to 3PM PST.

WE ACCEPT ALL MAJOR CREDIT CARDS!

Do not operate or service the equipment before reading the entire manual. Safety precautions should be followed at all times when operating this equipment. Failure to read and understand the safety messages and operating instructions could result in injury to yourself and others.

SAFETY MESSAGES

The four safety messages shown below will inform you about potential hazards that could injure you or others. The safety messages specifically address the level of exposure to the operator and are preceded by one of four words: **DANGER, WARNING, CAUTION** or **NOTICE.**

SAFETY SYMBOLS

DANGER

Indicates a hazardous situation which, if not avoided, **WILL** result in **DEATH** or **SERIOUS INJURY.**

WARNING

Indicates a hazardous situation which, if not avoided, **COULD** result in **DEATH** or **SERIOUS INJURY.**

CAUTION

Indicates a hazardous situation which, if not avoided, **COULD** result in **MINOR** or **MODERATE INJURY.**

NOTICE

Addresses practices not related to personal injury.

Potential hazards associated with the operation of this equipment will be referenced with hazard symbols which may appear throughout this manual in conjunction with safety messages.

Symbol	Safety Hazard
	Lethal exhaust gas hazards
	Explosive fuel hazards
	Burn hazards
	Overspeed hazards
	Rotating parts hazards
	Pressurized fluid hazards
	Electric shock hazards

GENERAL SAFETY

⚠ CAUTION

- **NEVER** operate this equipment without proper protective clothing, shatterproof glasses, respiratory protection, hearing protection, steel-toed boots and other protective devices required by the job or city and state regulations.

- **NEVER** operate this equipment when not feeling well due to fatigue, illness or when under medication.

- **NEVER** operate this equipment under the influence of drugs or alcohol.

- **ALWAYS** check the equipment for loosened threads or bolts before starting.
- **DO NOT** use the equipment for any purpose other than its intended purposes or applications.

NOTICE

- This equipment should only be operated by trained and qualified personnel 18 years of age and older.
- Whenever necessary, replace nameplate, operation and safety decals when they become difficult read.
- Manufacturer does not assume responsibility for any accident due to equipment modifications. Unauthorized equipment modification will void all warranties.
- **NEVER** use accessories or attachments that are not recommended by MQ Power for this equipment. Damage to the equipment and/or injury to user may result.
- **ALWAYS** know the location of the nearest **fire extinguisher.**

- **ALWAYS** know the location of the nearest **first aid kit.**

- **ALWAYS** know the location of the nearest phone or **keep a phone on the job site.** Also, know the phone numbers of the nearest **ambulance, doctor** and **fire department.** This information will be invaluable in the case of an emergency.

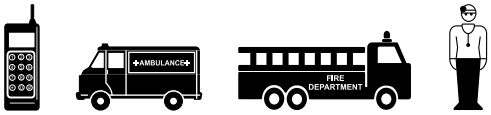

GENERATOR SAFETY

⚠ DANGER

- **NEVER** operate the equipment in an explosive atmosphere or near combustible materials. An explosion or fire could result causing severe **bodily harm or even death.**

⚠ WARNING

- **NEVER** disconnect any **emergency or safety devices.** These devices are intended for operator safety. Disconnection of these devices can cause severe injury, bodily harm or even death. Disconnection of any of these devices will void all warranties.

⚠ CAUTION

- **NEVER** lubricate components or attempt service on a running machine.

NOTICE

- **ALWAYS** ensure generator is on level ground before use.
- **ALWAYS** keep the machine in proper running condition.
- Fix damage to machine and replace any broken parts immediately.
- **ALWAYS** store equipment properly when it is not being used. Equipment should be stored in a clean, dry location out of the reach of children and unauthorized personnel

ENGINE SAFETY

⚠ DANGER

- The engine fuel exhaust gases contain poisonous carbon monoxide. This gas is colorless and odorless, and can cause death if inhaled.
- The engine of this equipment requires an adequate free flow of cooling air. **NEVER** operate this equipment in any enclosed or narrow area where free flow of the air is restricted. If the air flow is restricted it will cause injury to people and property and serious damage to the equipment or engine.

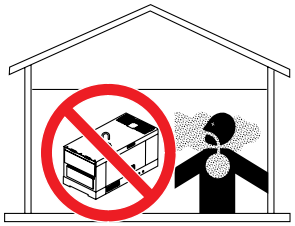

⚠ WARNING

- **DO NOT** place hands or fingers inside engine compartment when engine is running.
- **NEVER** operate the engine with heat shields or guards removed.
- Keep fingers, hands hair and clothing away from all moving parts to prevent injury.

- **DO NOT** remove the radiator cap while the engine is hot. High pressure boiling water will gush out of the radiator and severely scald any persons in the general area of the generator.

- **DO NOT** remove the coolant drain plug while the engine is hot. Hot coolant will gush out of the coolant tank and severely scald any persons in the general area of the generator.
- **DO NOT** remove the engine oil drain plug while the engine is hot. Hot oil will gush out of the oil tank and severely scald any persons in the general area of the generator.

⚠ CAUTION

- **NEVER** touch the hot exhaust manifold, muffler or cylinder. Allow these parts to cool before servicing equipment.

NOTICE

- **NEVER** run engine without an air filter or with a dirty air filter. Severe engine damage may occur. Service air filter frequently to prevent engine malfunction.
- **NEVER** tamper with the factory settings of the engine or engine governor. Damage to the engine or equipment can result if operating in speed ranges above the maximum allowable.

- Wet stacking is a common problem with diesel engines which are operated for extended periods with light or no load applied. When a diesel engine operates without sufficient load (less than 40% of the rated output), it will not operate at its optimum temperature. This will allow unburned fuel to accumulate in the exhaust system, which can foul the fuel injectors, engine valves and exhaust system, including turbochargers, and reduce the operating performance.

  In order for a diesel engine to operate at peak efficiency, it must be able to provide fuel and air in the proper ratio and at a high enough engine temperature for the engine to completely burn all of the fuel.

  Wet stacking does not usually cause any permanent damage and can be alleviated if additional load is applied to relieve the condition. It can reduce the system performance and increase maintenance. Applying an increasing load over a period of time until the excess fuel is burned off and the system capacity is reached usually can repair the condition. This can take several hours to burn off the accumulated unburned fuel.
- State Health Safety Codes and Public Resources Codes specify that in certain locations, spark arresters must be used on internal combustion engines that use hydrocarbon fuels. A spark arrester is a device designed to prevent accidental discharge of sparks or flames from the engine exhaust. Spark arresters are qualified and rated by the United States Forest Service for this purpose. In order to comply with local laws regarding spark arresters, consult the engine distributor or the local Health and Safety Administrator.

FUEL SAFETY

⚠ DANGER

- **DO NOT** start the engine near spilled fuel or combustible fluids. Diesel fuel is extremely flammable and its vapors can cause an explosion if ignited.
- **ALWAYS** refuel in a well-ventilated area, away from sparks and open flames.
- **ALWAYS** use extreme caution when working with **flammable** liquids.
- **DO NOT** fill the fuel tank while the engine is running or hot.
- **DO NOT** overfill tank, since spilled fuel could ignite if it comes into contact with hot engine parts or sparks from the ignition system.
- Store fuel in appropriate containers, in well-ventilated areas and away from sparks and flames.
- **NEVER** use fuel as a cleaning agent.
- **DO NOT** smoke around or near the equipment. Fire or explosion could result from fuel vapors or if fuel is spilled on a hot engine.

TOWING SAFETY

⚠ CAUTION

- Check with your local county or state safety towing regulations, in addition to meeting ***Department of Transportation (DOT) Safety Towing Regulations,*** before towing your generator.

- Refer to MQ Power trailer manual for additional safety information.
- In order to reduce the possibility of an accident while transporting the generator on public roads, **ALWAYS** make sure the trailer that supports the generator and the towing vehicle are mechanically sound and in good operating condition.
- **ALWAYS** shutdown engine before transporting
- Make sure the hitch and coupling of the towing vehicle are rated equal to, or greater than the trailer "gross vehicle weight rating."
- **ALWAYS** inspect the hitch and coupling for wear. **NEVER** tow a trailer with defective hitches, couplings, chains, etc.
- Check the tire air pressure on both towing vehicle and trailer. ***Trailer tires should be inflated to 50 psi cold.*** Also check the tire tread wear on both vehicles.
- **ALWAYS** make sure the trailer is equipped with a **safety chain.**
- **ALWAYS** properly attach trailer's safety chains to towing vehicle.
- **ALWAYS** make sure the vehicle and trailer directional, backup, brake and trailer lights are connected and working properly.
- DOT Requirements include the following:
  - Connect and test electric brake operation.
  - Secure portable power cables in cable tray with tie wraps.
- The maximum speed for highway towing is **55 MPH** unless posted otherwise. Recommended off-road towing is not to exceed **15 MPH** or less depending on type of terrain.
- Avoid sudden stops and starts. This can cause skidding, or jack-knifing. Smooth, gradual starts and stops will improve towing.
- Avoid sharp turns to prevent rolling.
- Trailer should be adjusted to a level position at all times when towing.
- Raise and lock trailer wheel stand in up position when towing.
- Place ***chock blocks*** underneath wheel to prevent **rolling** while parked.
- Place **support blocks** underneath the trailer's bumper to prevent **tipping** while parked.
- Use the trailer's swivel jack to adjust the trailer height to a level position while parked.

ELECTRICAL SAFETY

⚠ DANGER

- **DO NOT** touch output terminals during operation. Contact with output terminals during operation can cause **electrocution, electrical shock or burn.**

- The electrical voltage required to operate the generator can cause severe injury or even death through physical contact with live circuits. Turn generator and all circuit breakers **OFF** before performing maintenance on the generator or making contact with output terminals.

- **NEVER** insert any objects into the output receptacles during operation. This is extremely dangerous. The possibility exists of **electrical shock, electrocution or death.**

- Backfeed to a utility system can cause **electrocution** and/or property damage. **NEVER** connect the generator to a building's electrical system without a transfer switch or other approved device. All installations should be performed by a **licensed electrician** in accordance with all applicable laws and electrical codes. Failure to do so could result in electrical shock or burn, causing **serious injury or even death.**

Power Cord/Cable Safety

⚠ DANGER

- **NEVER** let power cords or cables **lay in water.**
- **NEVER stand in water** while AC power from the generator is being transferred to a load.
- **NEVER** use **damaged** or **worn** cables or cords when connecting equipment to generator. Inspect for cuts in the insulation.
- **NEVER** grab or touch a live power cord or cable with wet hands. The possibility exists of **electrical shock, electrocution or death.**

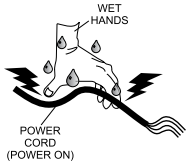

- Make sure power cables are securely connected to the generator's output receptacles. Incorrect connections may cause electrical shock and damage to the generator.

NOTICE

- **ALWAYS** make certain that proper power or extension cord has been selected for the job. See Cable Selection Chart in this manual.

Grounding Safety

⚠ DANGER

- **ALWAYS** make sure that electrical circuits are properly grounded to a suitable earth ground (ground rod) per the National Electrical Code (NEC) and local codes before operating generator. **Severe injury or death by electrocution** can result from operating an ungrounded generator.
- **NEVER** use gas piping as an electrical ground.

BATTERY SAFETY

⚠ DANGER

- **DO NOT** drop the battery. There is a possibility that the battery will explode.
- **DO NOT** expose the battery to open flames, sparks, cigarettes, etc. The battery contains combustible gases and liquids. If these gases and liquids come into contact with a flame or spark, an explosion could occur.

⚠ WARNING

- **ALWAYS** wear safety glasses when handling the battery to avoid eye irritation. The battery contains acids that can cause injury to the eyes and skin.

- Use well-insulated gloves when picking up the battery.
- **ALWAYS** keep the battery charged. If the battery is not charged, combustible gas will build up.
- **ALWAYS** recharge the battery in a well-ventilated environment to avoid the risk of a dangerous concentration of combustible gasses.
- If the battery liquid (dilute sulfuric acid) comes into contact with **clothing or skin**, rinse skin or clothing immediately with plenty of water.
- If the battery liquid (dilute sulfuric acid) comes into contact with **eyes**, rinse eyes immediately with plenty of water and contact the nearest doctor or hospital to seek medical attention.

⚠ CAUTION

- **ALWAYS** disconnect the **NEGATIVE battery terminal** before performing service on the generator.
- **ALWAYS** keep battery cables in good working condition. Repair or replace all worn cables.

ENVIRONMENTAL SAFETY

NOTICE

- Dispose of hazardous waste properly. Examples of potentially hazardous waste are used motor oil, fuel and fuel filters.

- **DO NOT** use food or plastic containers to dispose of hazardous waste.
- **DO NOT** pour waste, oil or fuel directly onto the ground, down a drain or into any water source.

Table 1. Generator Specifications		
Model	DCA25SSIU3	
Type	Revolving field, self ventilated, open protected type synchronous generator	
Armature Connection	**Star with Neutral**	**Zigzag**
Phase	3	Single
Standby Output	22.0 KW (27.5 kVA)	15.8 KW
Prime Output	20 KW (25.0 kVA)	14.4 KW
3Ø Voltage (L-L/L-N) Voltage Selector Switch at 3Ø 240/139	208Y/120, 220Y/127, 240Y/139	N/A
3Ø Voltage (L-L/L-N) Voltage Selector Switch at 3Ø 480/277	416Y/240, 440Y/254, 480Y/277	N/A
1Ø Voltage (L-L/L-N) Voltage Selector Switch at 1Ø 240/120	N/A	240/120
Power Factor	0.8	1.0
Frequency	60 Hz	
Speed	1800 rpm	
Aux. AC Power	Single Phase, 60 Hz	
Aux. Voltage/Output	4.8 Kw (2.4 kW x 2)	
Dry Weight (No Fuel)	1,411 lbs. (640 kg.)	
Dry Weight (With Fuel)	2,011 lbs. (912 kg.	
Maximum Lifting Capacity	3,240 lbs. (1,470 kg.)	
Table 2. Engine Specifications		
Model	ISUZU BV 4LE2 Tier 4i	
Type	4 cycle, water-cooled, direct injection, turbo-charged	
No. of Cylinders	4 cylinders	
Bore x Stroke	3.35 in. x 3.78 in. (85 mm x 96 mm)	
Displacement	132 cu. in. (2179 cc)	
Rated Output	34.3 HP/1800 RPM	
Starting	Electric	
Coolant Capacity	1.7 gal. (6.6 liters)	
Lube Oil Capacity	2.25 gal. (8.5 liters)	
Fuel Type	#2 Diesel Fuel (Low Sulfur Diesel Fuel Only	
Fuel Tank Capacity	100 gal. (379 liters)	
Fuel Consumption	1.66 gal. (6.3 L)/hr at **full load**	1.21 gal. (4.6 L)/hr at **3/4 load**
	0.85 gal. (3.2 L)/hr at **1/2 load**	0.58 gal. (2.2 L)/hr at **1/4 load**
Battery	12V 53Ah x 1	

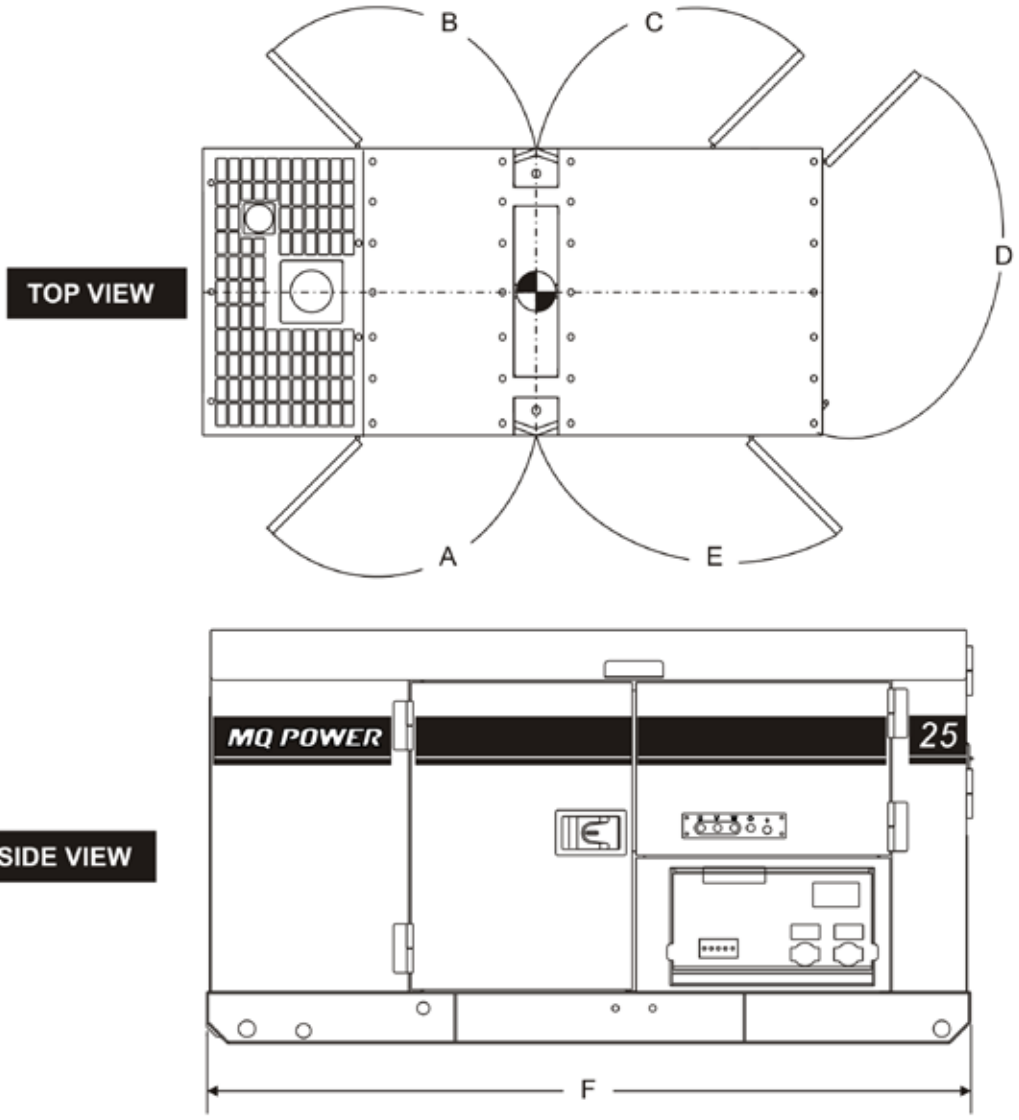

Figure 1. Dimensions

Table 3. Dimensions			
Reference Letter	Dimension in. (mm)	Reference Letter	Dimension in. (mm)
A	21.06 in. (535 mm.)	F	94.49 in. (1,850 mm.)
B	21.06 in. (535 mm.)	G	39.37 in. (1,000 mm.)
C	24.21 in. (615 mm.)	H	29.53 in. (750 mm.)
D	26.38 in. (670 mm.)		
E	25.0 in. (635 mm.)		

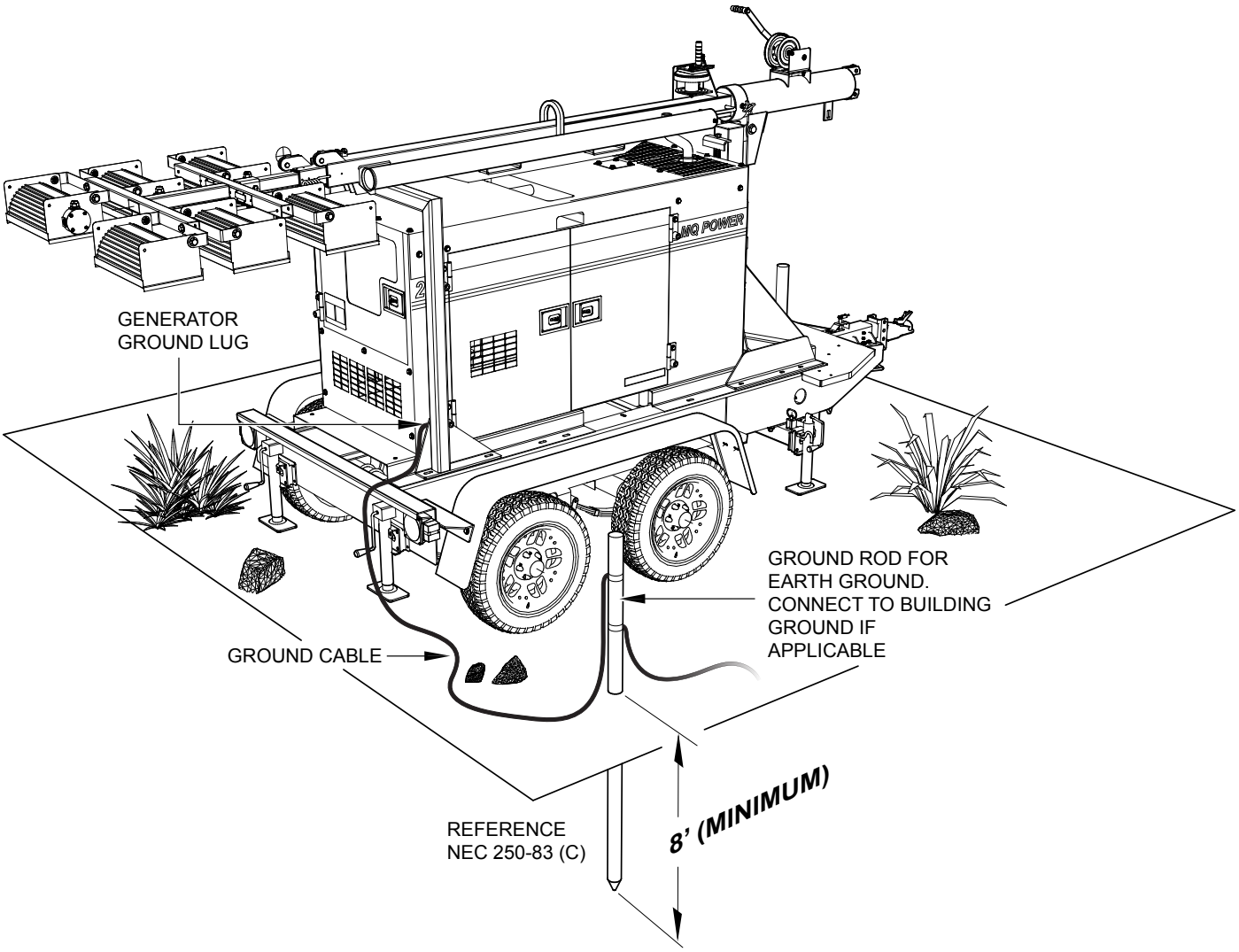

Figure 2. Typical Generator Grounding Application

OUTDOOR INSTALLATION

Install the generator in a area that is free of debris, bystanders, and overhead obstructions. Make sure the generator is on secure level ground so that it cannot slide or shift around. Also install the generator in a manner so that the exhaust will not be discharged in the direction of nearby homes.

The installation site must be relatively free from moisture and dust. All electrical equipment should be protected from excessive moisture. Failure to do will result in deterioration of the insulation and will result in short circuits and grounding.

Foreign materials such as dust, sand, lint and abrasive materials have a tendency to cause excessive wear to engine and alternator parts.

⚠ CAUTION

Pay close attention to ventilation when operating the generator inside tunnels and caves. The engine exhaust contains noxious elements. Engine exhaust must be routed to a ventilated area.

INDOOR INSTALLATION

Exhaust gases from diesel engines are extremely poisonous. Whenever an engine is installed indoors the exhaust fumes must be vented to the outside. The engine should be installed at least two feet from any outside wall. Using an exhaust pipe which is too long or too small can cause excessive back pressure which will cause the engine to heat excessively and possibly burn the valves.

MOUNTING

The generator must be mounted on a solid foundation (such as concrete) and set firmly on the foundation to isolate vibration of the generator when it is running. The generator must set at least 6 inches above the floor or grade level (in accordance to NFPA 110, Chapter 5-4.1). **DO NOT** remove the metal skids on the bottom of the generator. They are to resist damage to the bottom of the generator and to maintain alignment.

GENERATOR GROUNDING

To guard against electrical shock and possible damage to the equipment, it is important to provide a good **EARTH** ground.

Article 250 (Grounding) of the National Electrical Code (NEC) provides guide lines for proper grounding and specifies that the cable ground shall be connected to the grounding system of the building as close to the point of cable entry as practical.

NEC articles 250-64(b) and 250-66 set the following grounding requirements:

1. Use one of the following wire types to connect the generator to earth ground.
   a. Copper - 8 AWG (5.3 mm^2)
   b. Aluminum - 6 AWG (8.4 mm^2)
2. When grounding the generator (Figure 2) connect the ground cable between the lock washer and the nut on the generator and tighten the nut fully. Connect the other end of the ground cable to earth ground.
3. NEC article 250-52 (5) specifies that the earth ground rod should be buried a minimum of 8 ft. into the ground.

NOTICE

When connecting the generator to any buildings electrical system **ALWAYS** consult with a licensed electrician.

GENERATOR

This MQ Power generator (Figure 3) is a high quality portable (requires a trailer for transport) power source for telecom sites, lighting facilities, power tools, submersible pumps and other industrial and construction machinery.

ENGINE OPERATING PANEL

The "Engine Operating Panel" is provided with the following:

- Tachometer
- Oil Pressure Gauge
- Water Temperature Alarm Lamp
- Oil Pressure Alarm Lamp
- Charging Ammeter Gauge
- Pre-Heat Lamp
- Panel Light
- Panel Light Switch
- Starter Switch
- Water Temperature Gauge
- Fuel Gauge
- Fuel Filter Water Level Alarm Lamp

GENERATOR CONTROL PANEL

The "Generator Control Panel" is provided with the following:

- Frequency Meter (Hz)
- AC Ammeter (Amps)
- AC Voltmeter (Volts)
- Ammeter Change-Over Switch
- Voltmeter Change-Over Switch
- Voltage Regulator
- 3-Pole, 60 amp Main Circuit Breaker
- "Control Box" (located behind the Gen. Control Panel)
  - Automatic Voltage Regulator
  - Current Transformer
  - Over-Current Relay
  - Starter Relay
  - Voltage Selector Switch

OUTPUT TERMINAL PANEL

The "Output Terminal Panel" is provided with the following:

- Two 250 VAC output receptacles (CS-6369), 50 amps
- Two auxiliary circuit breakers, 250V @50 amps
- Two 125 VAC output receptacles, (GFCI), 20 amps
- Two GFCI circuit breakers, 125V@ 20 amps
- Five output terminal lugs (3Ø power)
- 8 Fuses

OPEN DELTA EXCITATION SYSTEM

This generator is equipped with the state of the art **"Open-Delta"** excitation system. The open delta system consist of an electrically independent winding wound among stationary windings of the AC output section.

There are four connections of the open delta A, B, C and D. During steady state loads, the power from the voltage regulator is supplied from the parallel connections of A to B, A to D, and C to D. These three phases of the voltage input to the voltage regulator are then rectified and are the excitation current for the exciter section.

When a heavy load, such as a motor starting or a short circuit occurs, the automatic voltage regulator (AVR) switches the configuration of the open delta to the series connection of B to C. This has the effect of adding the voltages of each phase to provide higher excitation to the exciter section and thus better voltage response during the application of heavy loads.

The connections of the AVR to the AC output windings are for sensing only. No power is required from these windings.

The open-delta design provides virtually unlimited excitation current, offering maximum motor starting capabilities. The excitation does not have a **"fixed ceiling"** and responds according the demands of the required load.

ENGINE

This generator unit incorporates an ISUZU BV-4LE2 diesel engine. This engine is designed to meet every performance requirement for the generator. Refer to Table 2 for engine specifications.

In keeping with MQ Power's policy of constantly improving its products, the specifications quoted herein are subject to change without prior notice.

ELECTRIC GOVERNOR SYSTEM (OPTION)

The electric governor system controls the RPMs of the engine. When the engine demand increases or decreases, the governor system regulates the frequency variation to ±.25%.

EXTENSION CABLES

When electric power is to be provided to various tools or loads at some distance from the generator, extension cords are normally used. Cables should be sized to allow for distance in length and amperage so that the voltage drop between the generator and point of use (load) is held to a minimum. Use the cable selection chart (Table 6) as a guide for selecting proper extension cable size.

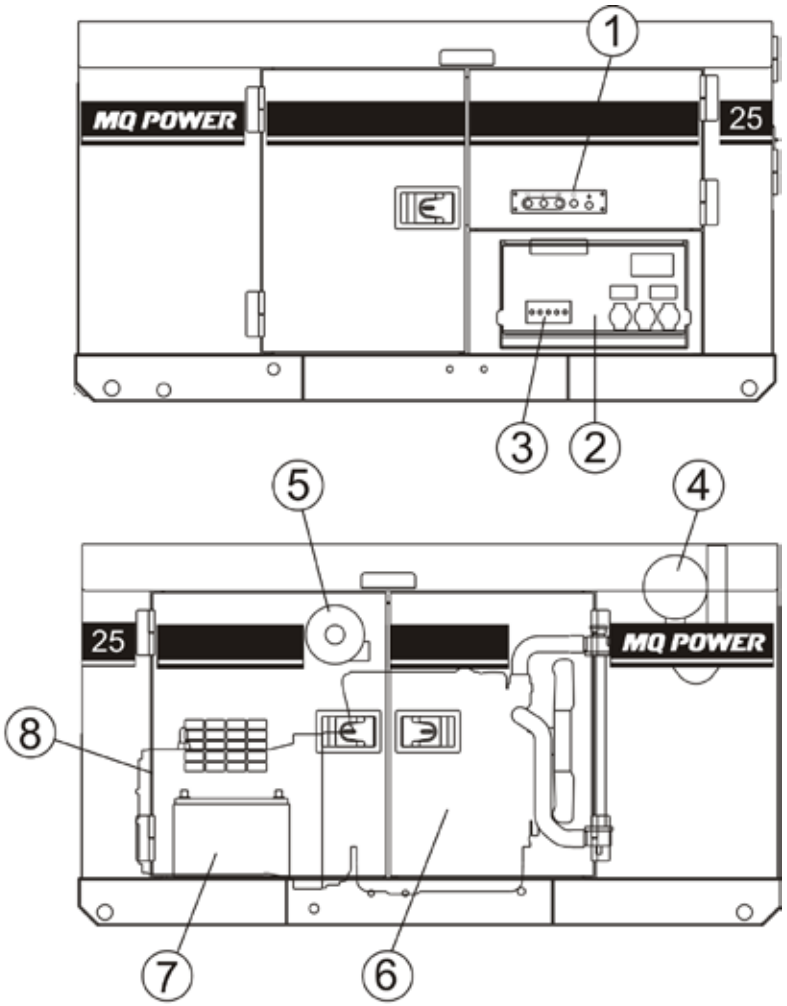

Figure 3. Major Components

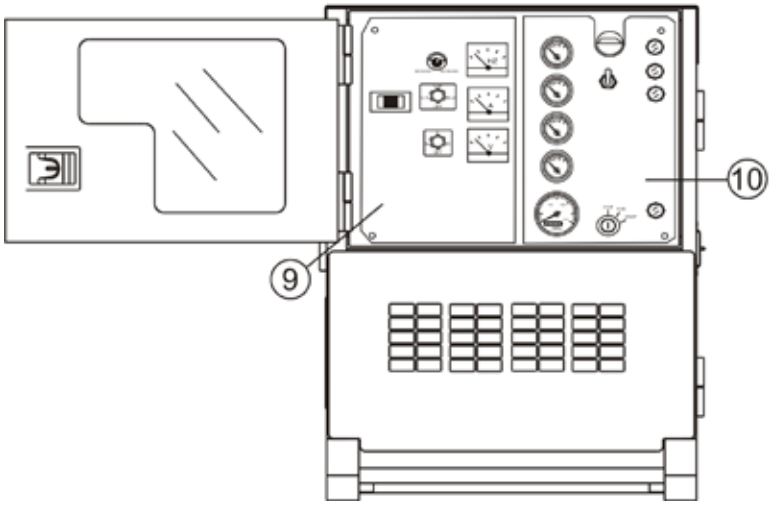

Table 4. Generator Major Components	
ITEM NO.	**DESCRIPTION**
1	Terminal Panel Assembly
2	Output Terminal Assembly
3	Fuse Block Assembly
4	Muffler Assembly
5	Air Cleaner Assembly
6	Engine Assembly
7	Battery Assembly
8	Generator Assembly
9	Generator Control Panel Assembly
10	Engine Operating Panel Assembly

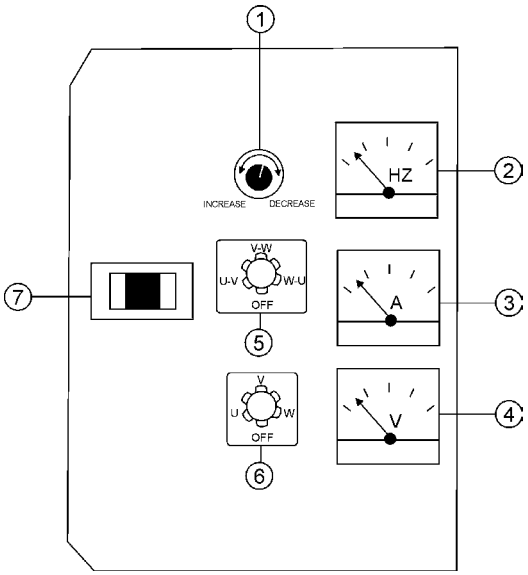

Figure 4. Generator Control Panel

The definitions below describe the controls and functions of the Generator Control Panel (Figure 4).

1. **Voltage Regulator Control** — Allows ±15% manual adjustment of the generator's output voltage.
2. **Frequency Meter** — Indicates the output frequency in hertz (Hz). Normally 60 Hz.
3. **AC Ammeter** — Indicates the amount of current the load is drawing from the generator per leg selected by the ammeter phase-selector switch.
4. **AC Voltmeter** — Indicates the output voltage present at the U,V, and W Output Terminal Lugs.
5. **Ammeter Change-Over Switch** — This switch allows the AC ammeter to indicate the current flowing to the load connected to any phase of the output terminals, or to be switched off. This switch does not effect the generator output in any fashion, it is for current reading only.
6. **Voltmeter Change-Over Switch** — This switch allows the AC voltmeter to indicate phase to phase voltage between any two phases of the output terminals or to be switched off.
7. **Main Circuit Breaker**—This three-pole, 60A main breaker is provided to protect the U,V, and W Output Terminal Lugs from overload.

Located behind the generator control panel is the Generator Control Box. This box contains some of the necessary electronic components required to make the generator function.

The Control Box is equipped with the following major components:

- Over-Current Relay
- Automatic Voltage Regulator (AVR)
- Starter Relay
- Current Transformer
- Voltage Selector Switch
- Main Circuit Breaker

NOTICE

Remember the **overcurrent relay** monitors the current flowing from the **U,V, and W Output Terminal Lugs** to the load.

In the event of a short circuit or over current condition, it will automatically trip the 60 amp main breaker.

To restore power to the **Output Terminal Panel**, press the reset button on the overcurrent relay and place the **main** circuit breaker in the **closed** position (**ON**).

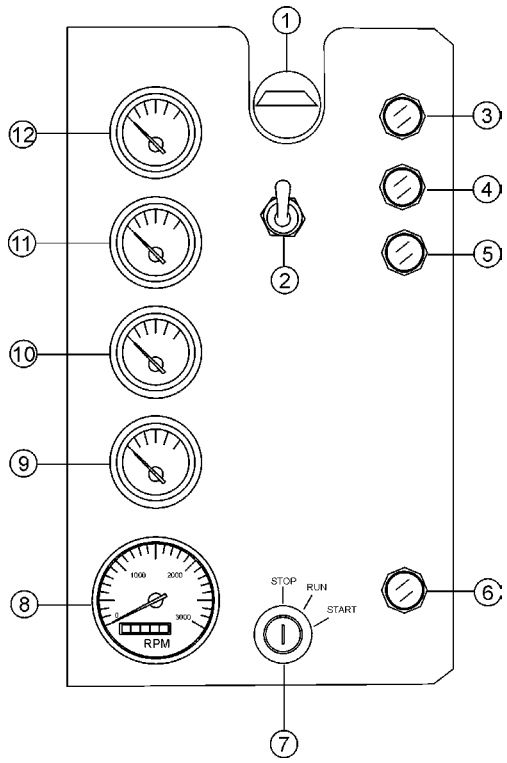

Figure 5. Engine Operating Panel

The definitions below describe the controls and functions of the Engine Operating Panel (Figure 5).

1. **Panel Light** - Normally used in dark places or at night. When activated, panel will luminate. When the generator is not in use, turn the panel light switch to the OFF position.
2. **Panel Light Switch**- When activated, will turn on control panel light.
3. **Oil Pressure Alarm Lamp** - Indicates that the oil pressure is too low or high. This condition will cause the engine to shut down.
4. **Water Temperature Alarm Lamp** - Indicates that the engine water temperature is too high. This condition will cause the engine to shut down.
5. **Fuel Filter Alarm Lamp** - Indicates that the water level in the fuel filter has risen. Drain the water in the fuel filter strainer when this condition occurs.
6. **Pre-heat Lamp** - Indicates (ON) when the engine is ready for starting during cold weather operating conditiions.
7. **Ignition Switch** – Three position switch, stop, run and start. Insert ignition key to start and stop engine.
8. **Tachometer** – Indicates engine speed in RPM's for 60 Hz operation. This meter should indicate 1800 RPM's when the rated load is applied. In addition a built in hour meter will record the number of operational hours that the generator has been in use.
9. **Fuel Gauge** – Indicates amount of diesel fuel available.
10. **Charging Ammeter Gauge** – Indicates the current being supplied by the engine's alternator which provides current for generator's control circuits and battery charging system.
11. **Water Temperature Gauge** – During normal operation this gauge should read between 165°~203° F. (74°~95° C).
12. **Oil Pressure Gauge** – Normal operation should be approximately 28~71 psi (193~490 kPa). When starting the generator the oil pressure may read a bit higher, but after the engine warms up the oil pressure should return to normal.

OUTPUT TERMINAL PANEL

The Output Terminal Panel (Figure 6) shown below is located on the right-hand side (left from control panel) of the generator. Lift up on the cover to gain access to receptacles and terminal lugs.

NOTICE

Terminal legs "O" and "Ground" are considered bonded grounds.

OUTPUT TERMINAL FAMILIARIZATION

The "Output Terminal Panel " (Figure 6) is provided with the following:

- Two 120/240V output receptacles @ 50 amp
- Two Circuit Breakers @ 50 amps
- Two 120V GFCI receptacles @ 20 amp
- Two GFCI Circuit Breakers @ 20 amps
- Five Output Terminal Lugs (U, V, W, O, Ground)
- Eight Fuses

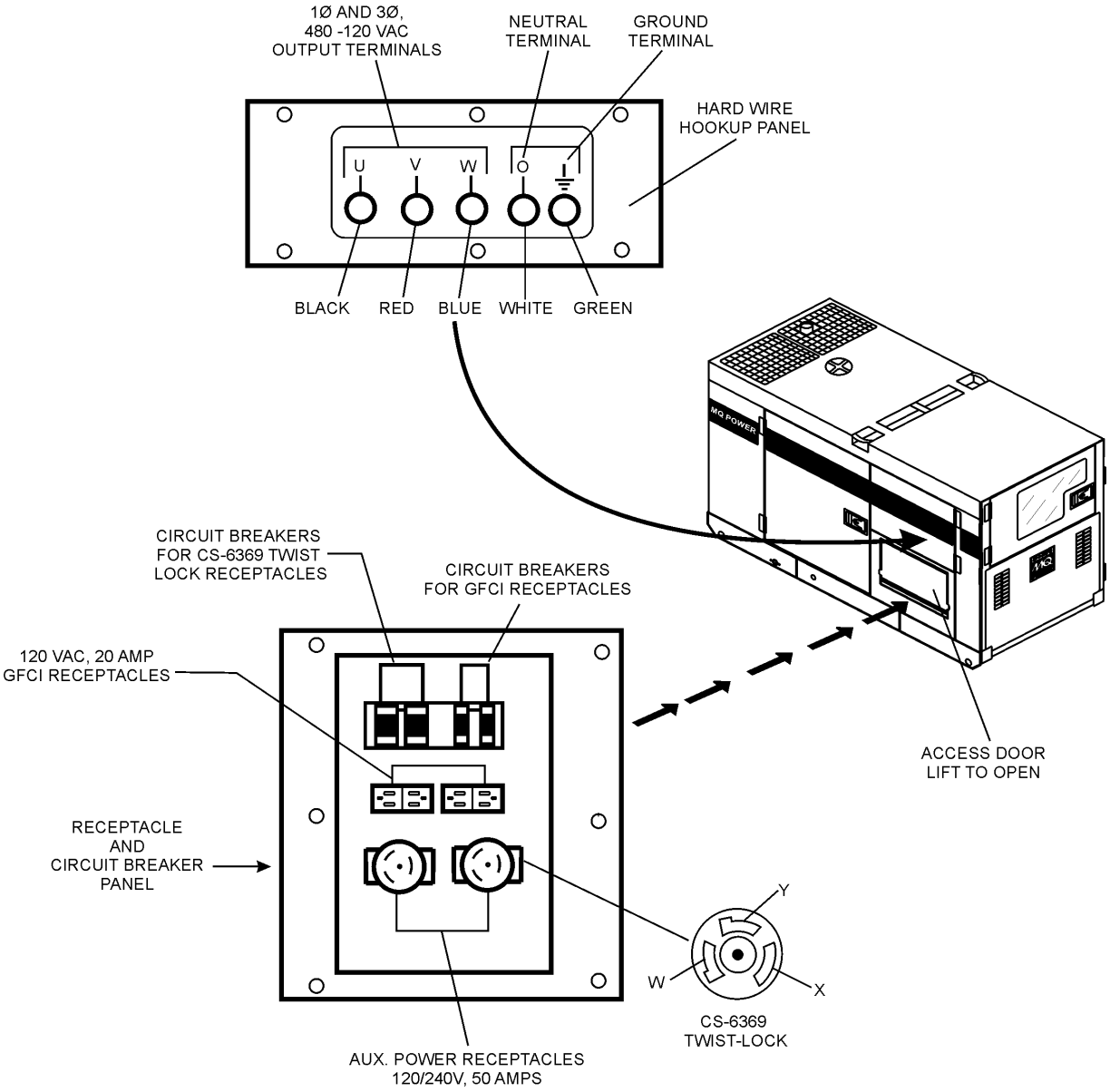

Figure 6. Output Terminal Panel

120 VAC GFCI Receptacles

There are two 120 VAC, 20 amp GFCI (Duplex Nema 5-20R) receptacles provided on the output terminal panel. These receptacles can be accessed in **any voltage selector switch** position. Each receptacle is protected by a 20 amp circuit breaker. These breakers are located directly above the GFCI receptacles. Remember the load output (current) of both GFCI receptacles is dependent on the load requirements of the U, V, and W output terminal lugs.

Pressing the **reset** button resets the GFCI receptacle after being tripped. Pressing the **test button** (See Figure 7) in the center of the receptacle will check the GFCI function. Both receptacles should be tested at least once a month.

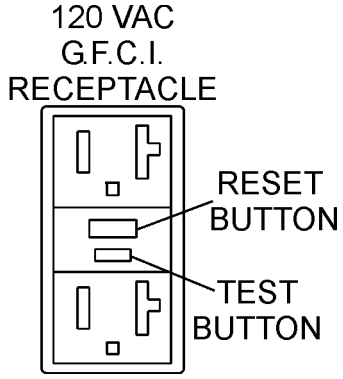

Figure 7. G.F.C.I. Receptacle

Twist Lock Dual Voltage 120/240 VAC Receptacles

There are two 120/240V, 50 amp auxiliary twist-lock (CS-6369) receptacles (Figure 8) provided on the output terminal panel. These receptacles can **only** be accessed when the voltage selector switch is placed in the **single-phase 240/120 position.**

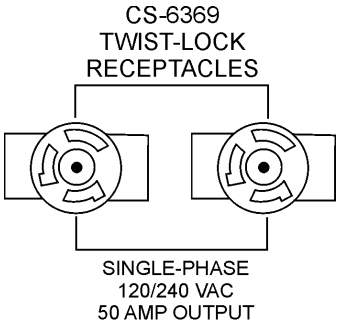

Figure 8. 120/240V Twist-Lock Auxiliary Receptacles

Each auxiliary receptacle is protected by a 50 amp circuit breaker. These breakers are located directly above the GFCI receptacles. Remember the load output (current) on both auxiliary receptacles is dependent on the load requirements of the **Output Terminal Lugs.**

Turn the **voltage regulator control knob** (Figure 9) on the control panel to obtain the desired voltage. Turning the knob clockwise will **increase** the voltage, turning the knob counter-clockwise will **decrease** the voltage.

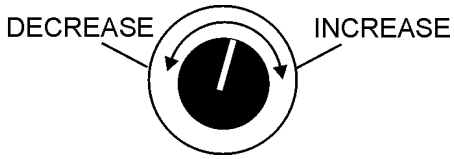

Figure 9. Voltage Regulator Control Knob

Removing the Plastic Face Plate (Hard Wire Hookup Panel)

The ***Output Terminal Lugs*** are protected by a plastic face plate cover (Figure 10). Unscrew the securing bolts (2) and raise the plastic face plate to gain access to the output terminal lugs.

After the load wires have been securely attached to the output terminal lugs, lower the plastic face plate, and reinstall the retaining bolts.

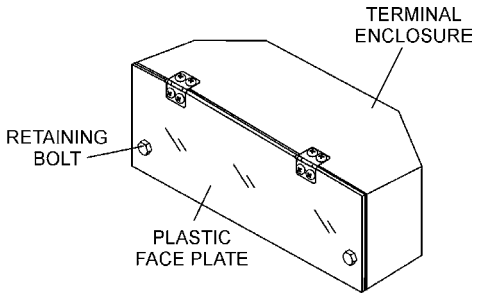

Figure 10. Plastic Face Plate (Output Terminal Lugs)

Connecting Loads

Loads can be connected to the generator by the **Output Terminal Lugs** or the convenience receptacles (Figure 11). Make sure to read the operation manual before attempting to connect a load to the generator.

To protect the output terminals from overload, a 3-pole, 60A **main** circuit breaker is provided. Make sure to switch **ALL** circuit breakers to the **OFF** position prior to starting the engine.

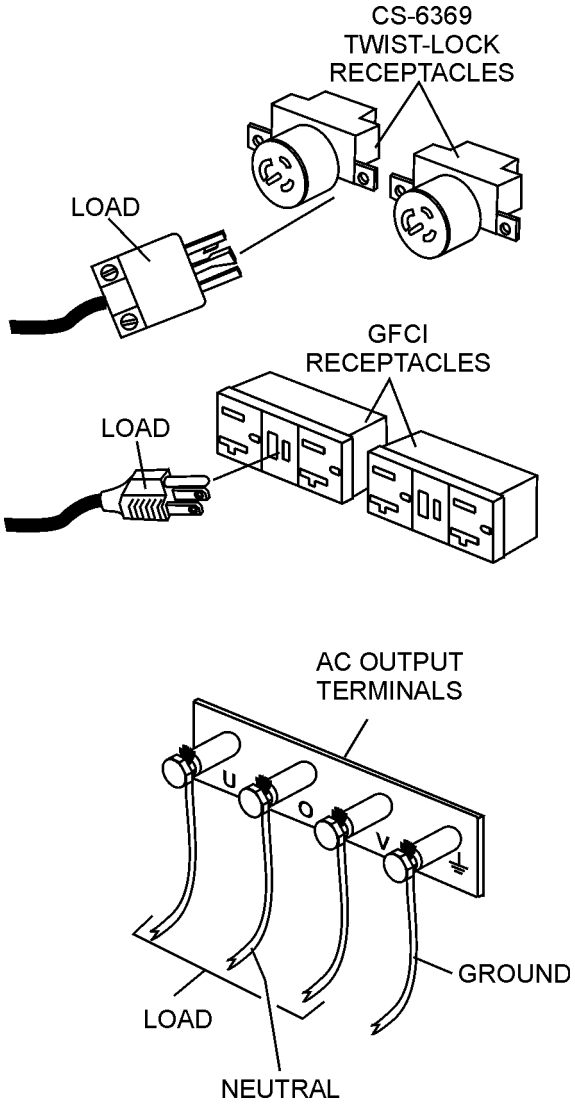

Figure 11. Connecting Loads

Over Current Relay

An **over current relay** (Figure 12) is connected to the main circuit breaker. In the event of an overload, both the circuit breaker and the over current relay may trip. If the circuit breaker can not be reset, the **reset button** on the over current relay must be pressed. The over current relay is located in the control box.

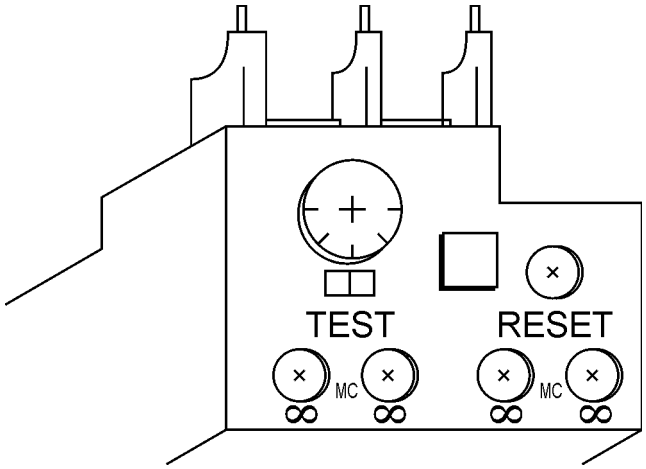

Figure 12. Over Current Relay

SINGLE PHASE LOAD

Always be sure to check the nameplate on the generator and equipment to insure the wattage, amperage, frequency, and voltage requirements are satisfactorily supplied by the generator for operating the equipment.

Generally, the wattage listed on the nameplate of the equipment is its rated output. Equipment may require 130—150% more wattage than the rating on the nameplate, as the wattage is influenced by the efficiency, power factor and starting system of the equipment.

NOTICE

If wattage is not given on the equipment's name plate, approximate wattage may be determined by multiplying nameplate voltage by the nameplate amperage.

WATTS = VOLTAGE x AMPERAGE

The power factor of this generator is 0.8. SeeTable 5 below when connecting loads.

Table 5. Power Factor By Load

Type of Load	Power Factor
Single-phase induction motors	0.4-0.75
Electric heaters, incandescent lamps	1.0
Fluorescent lamps, mercury lamps	0.4-0.9
Electronic devices, communication equipment	1.0
Common power tools	0.8

Table 6. Cable Selection (60 Hz, Single Phase Operation)

Current in Amperes	Load in Watts		Maximum Allowable Cable Length			
	At 100 Volts	At 200 Volts	#10 Wire	#12 Wire	#14 Wire	#16 Wire
2.5	300	600	1000 ft.	600 ft.	375 ft.	250 ft.
5	600	1200	500 ft.	300 ft.	200 ft.	125 ft.
7.5	900	1800	350 ft.	200 ft.	125 ft.	100 ft.
10	1200	2400	250 ft.	150 ft.	100 ft.	
15	1800	3600	150 ft.	100 ft.	65 ft.	
20	2400	4800	125 ft.	75 ft.	50 ft.	
CAUTION: Equipment damage can result from low voltage						

THREE PHASE LOAD

When calculating the power requirements for 3-phase power use the following equation:

$$KVA = \frac{VOLTAGE \times AMPERAGE \times 1.732}{1000}$$

NOTICE

If 3Ø load (kVA) is not given on the equipment nameplate, approximate 3Ø load may be determined by multiplying voltage by amperage by 1.732.

NOTICE

Motors and motor-driven equipment draw much greater current for starting than during operation.

An inadequate size connecting cable which cannot carry the required load can cause a voltage drop which can burn out the appliance or tool and overheat the cable. See Table 6.

- When connecting a resistance load such as an incandescent lamp or electric heater, a capacity of up to the generating set's rated output (kW) can be used.
- When connecting a fluorescent or mercury lamp, a capacity of up to the generating set's rated output (kW) multiplied by 0.6 can be used.
- When connecting an electric drill or other power tools, pay close attention to the required starting current capacity.

When connecting ordinary power tools, a capacity of up to the generating set's rated output (kW) multiplied by 0.8 can be used.

⚠ DANGER

Before connecting this generator to any building's electrical system, a **licensed electrician** must install an **isolation (transfer) switch**. Serious damage to the building's electrical system may occur without this transfer switch.

GENERATOR OUTPUT VOLTAGES

A wide range of voltages are available to supply voltage for many different applications. Voltages are selected by using the **voltage selector** switch (Figure 13). To obtain some of the voltages as listed in Table 7 (see below) will require a fine adjustment using the **voltage regulator** (VR) **control knob** located on the control panel.

Voltage Selector Switch

The voltage selector switch (Figure 13) is located above the output terminal panel's Hard Wire Hook-up Panel. It has been provided for ease of voltage selection.

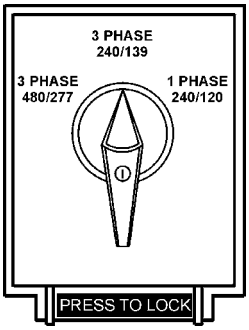

Figure 13. Voltage Selector Switch

Voltage Selector Switch Locking Button

To lock the voltage selector switch, ***press and hold the red button*** located at the bottom of the switch. While holding the red button down, insert a pad lock into the hole next to the button to retain it in the inward locked position. When the lock is removed, the red button is spring loaded and will return to its normal outward unlocked position.

⚠ CAUTION

NEVER change the position of the **voltage selector switch** while the engine is running. **ALWAYS** place circuit breaker in the **OFF** position before selecting voltage**.**

Table 7. Voltages Available

UVWO Output Terminal Lugs	Voltage Selector Switch 3-Phase 240/139V Position			Voltage Selector Switch 3-Phase 480/277V Position		
3Ø Line-Line	208V	220V	240V	416V	440V	480V
1Ø Line-Neutral	120V	127V	139V	240V	254V	277V
Voltage Selector Switch Single-Phase 240/120V Position						
1Ø Line-Neutral/ Line-Line	120V Line-Neutral	N/A	N/A	240V Line-Line	N/A	N/A

Generator Amperage

Table 8 shows the **maximum** amps the generator can provide. **DO NOT** exceed the maximum amps as listed..

Table 8. Generator Maximum Amps

Rated Voltage	Maximum Amps
1Ø 120 Volt	55.6 amps (4 wire) 60A x 2 (Zigzag)
1Ø 240 Volt	27.8 amps (4 wire) 60A (Zigzag)
3Ø 240 Volt	60 amps
3Ø 480 Volt	30 amps

GFCI Receptacle Load Capability

The load capability of the GFCI receptacles is directly related to the voltage being supplied at either the output terminals or the 2 twist lock auxiliary receptacles.

Table 9 and Table 10 show what amount of current is available at the GFCI receptacles when the output terminals and twist lock receptacles are in use. Be careful that your load does not to exceed the available current capability at the receptacles.

Table 9. 1Ø GFCI Receptacle Load Capacity

KW in Use Twist Lock (C6369)	Available Load Current (Amps)
1Ø 240/120V	GFCI Duplex 5-20R 120V
14.4	0
13.2	5 amps/receptacle
12.0	10 amps/receptacle
10.8	15 amps/receptacle
9.6	20 amps/receptacle

Table 10. 3Ø Generator Maximum Amps

KVA in Use (UVWO Terminals)	Available Load Current (Amps)
3Ø 240/480V	GFCI Duplex 5-20R 120V
25	0 amps/receptacle
20.8	5 amps/receptacle
16.7	10 amps/receptacle
12.5	15 amps/receptacle
8.4	20 amps/receptacle

HOW TO READ THE AC AMMETER AND AC VOLTAGE GAUGES

The AC ammeter and AC voltmeter gauges are controlled by the AC ammeter and AC voltmeter change-over switches.

Both of these switches are located on the control panel and **DO NOT** effect the generator output. They are provided to help observe how much power is being supplied, produced at the UVWO terminals lugs.

Before taking a reading from either gauge, set the ***Voltage Selector Switch*** (Figure 14) to the position which produces the required voltage (For example, for 3Ø 240V, choose the center 3Ø 240/139V position on the voltage selector switch).

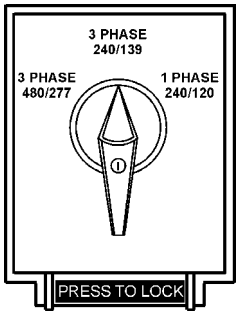

Figure 14. Voltage Selector Switch 240/139V 3Ø Position

NOTICE

For 3Ø 208V/1Ø,120V, place the Voltage Selector Switch in the 3 Phase 240/139 position.

AC Voltmeter Gauge Reading

Place the ***AC Voltmeter Change-Over Switch*** (Figure 15) in the W-U position and observe the phase to phase voltage reading between the W and U terminals as indicated on the ***AC Voltmeter Gauge*** (Figure 16)

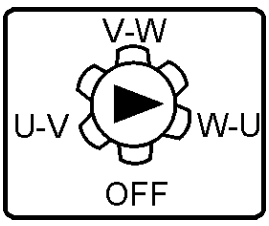

Figure 15. AC Voltmeter Change-Over Switch

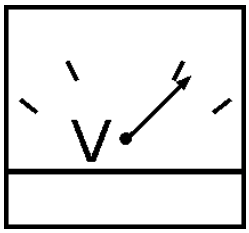

Figure 16. AC Voltmeter Gauge

AC Ammeter Gauge Reading

Place the ***AC Ammeter Change-Over Switch*** (Figure 17) in the U position and observe the current reading (load drain) on the U terminal as indicated on the ***AC Ammeter Gauge*** (Figure 18). This process can be repeated for terminals V and W.

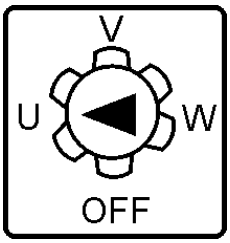

Figure 17. AC Ammeter Change-Over Switch

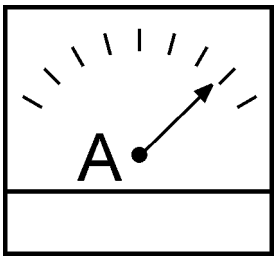

Figure 18. AC Ammeter (Amp Reading on U Lug)

NOTICE

The ***ammeter*** gauge will only show a reading when the ***Output Terminal Lugs*** are connected to a load and in use.

UVWO TERMINAL OUTPUT VOLTAGES

Various output voltages can be obtained using the UVWO output terminal lugs. The voltages at the terminals are dependent on the position of the **Voltage Selector Switch** and the adjustment of the **Voltage Regulator Control Knob**.

Remember the voltage selector switch determines the **range** of the output voltage. The voltage regulator (VR) allows the user to increase or decrease the selected voltage.

3Ø-240/139 UVWO Terminal Output Voltages

1. Place the voltage selector switch in the 3Ø 240/139 position as shown in Figure 19..

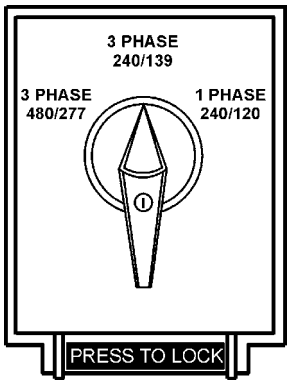

Figure 19. Voltage Selector Switch 3Ø-240/139V Position

2. Connect the load wires to the UVWO terminals as shown in Figure 20.

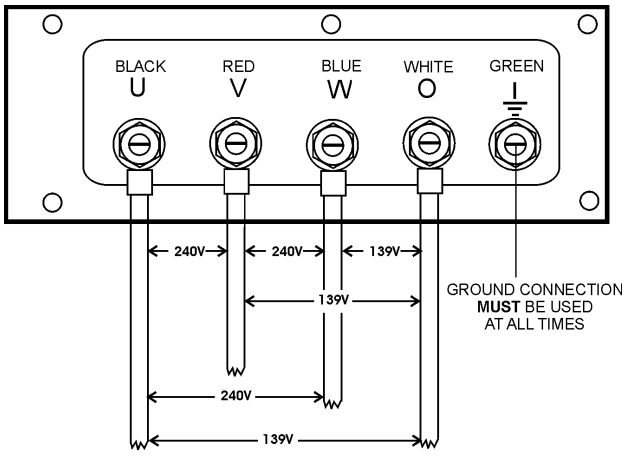

Figure 20. UVWO Terminal Lugs 3Ø-240/139V Connections

3. Turn the voltage regulator knob (Figure 21) clockwise to increase voltage output, turn counterclockwise to decrease voltage output. Use voltage regulator adjustment knob whenever fine tuning of the output voltage is required.

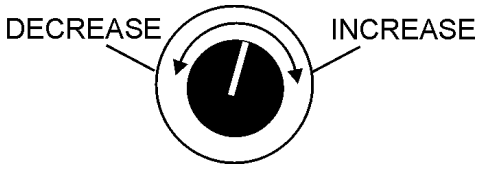

Figure 21. Voltage Regulator Knob

3Ø-208V/1Ø-120V UVWO Terminal Output Voltages

1. Place the voltage selector switch in the 3Ø 240/139 position as shown in Figure 22.

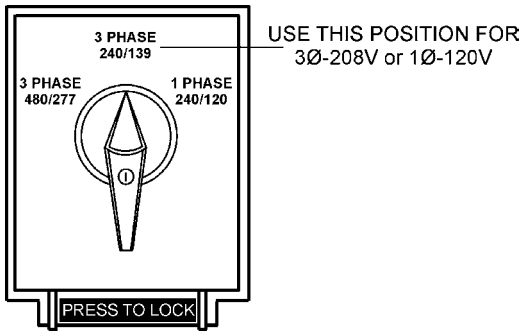

Figure 22. Voltage Selector Switch 3Ø-240/139V Position

2. Connect the load wires to the UVWO terminals as shown in Figure 23.

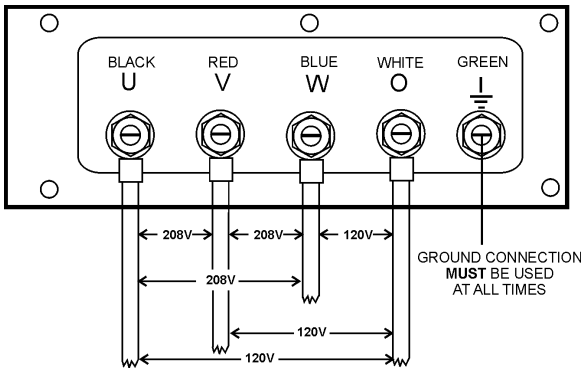

Figure 23. UVWO Terminal Lugs 3Ø-208/1Ø-120V Connections

NOTICE

To achieve a 3Ø 208V output the voltage selector switch must be in the 3Ø-240/139 position and the voltage regulator must be adjusted to 208V..

3Ø-480/277V UVWO Terminal Output Voltages

1. Place the voltage selector switch in the 3Ø 480/277 position as shown in Figure 24.

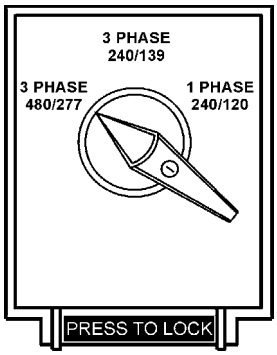

Figure 24. Voltage Selector Switch 3Ø-480/277V Position

2. Connect the load wires to the UVWO terminals as shown in Figure 25.

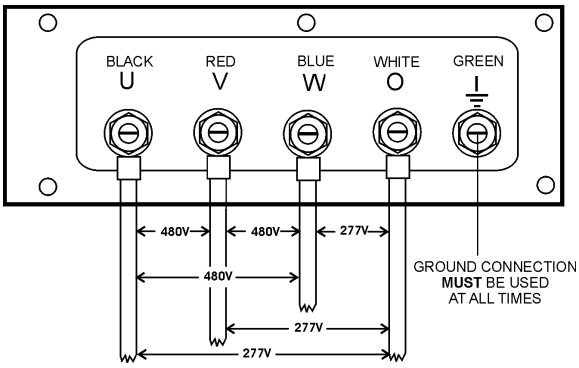

Figure 25. UVWO Terminal Lugs 3Ø-440/254V Connections

3. Turn the voltage regulator knob (Figure 21) clockwise to increase voltage output, turn counterclockwise to decrease voltage output. Use voltage regulator adjustment knob whenever fine tuning of the output voltage is required.

1Ø-240/120V UVWO Terminal Output Voltages

1. Place the voltage selector switch in the 1Ø 240/120 position as shown in Figure 26.

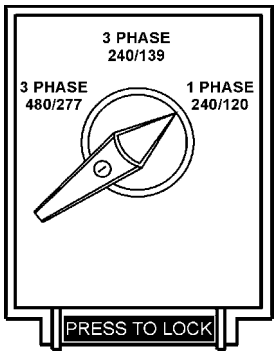

Figure 26. Voltage Selector Switch 1Ø-240/120V Position

2. Connect the load wires to the UVWO terminals as shown in Figure 27.

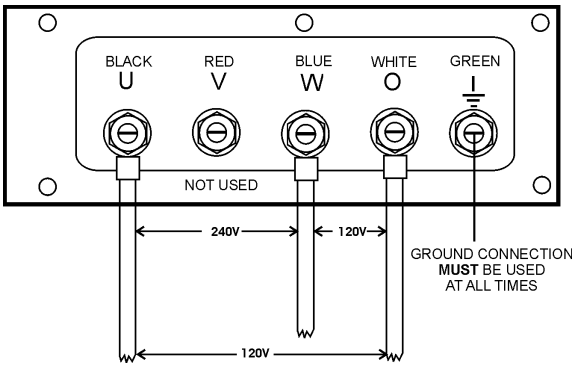

Figure 27. UVWO Terminal Lugs 1Ø-200/100V Connections

3. Turn the voltage regulator knob (Figure 21) clockwise to increase voltage output, turn counterclockwise to decrease voltage output. Use voltage regulator adjustment knob whenever fine tuning of the output voltage is required.

NOTICE

ALWAYS make sure that the connections to the UVWO terminals are **secure** and **tight**. The possibility of arcing exists, that could cause a fire.

CIRCUIT BREAKERS

To protect the generator from an overload, a 3-pole, 60 amp, main circuit breaker is provided to protect the **U,V, and W Output Terminals** from overload. In addition two single-pole, 20 amp **GFCI** circuit breakers are provided to protect the GFCI receptacles from overload. Two 50 amp circuit breakers have also been provided to protect the auxiliary receptacles from overload. Make sure to switch **ALL** circuit breakers to the **OFF** position prior to starting the engine.

LUBRICATION OIL

Fill the engine crankcase with lubricating oil through the filler hole, but **DO NOT** overfill. Make sure the generator is level and verify that the oil level is maintained between the two notches (Figure 28) on the dipstick. See Table 11 for proper selection of engine oil.

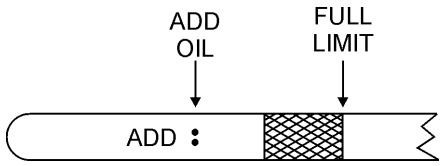

Figure 28. Engine Oil Dipstick

When checking the engine oil, be sure to check if the oil is clean. If the oil is not clean, drain the oil by removing the oil drain plug, and refill with the specified amount of oil as outlined in the **ISUZU Engine Owner's Manual**. Oil should be warm before draining.

Other types of motor oils may be substituted if they meet the following requirements:

- API Service Classification CC/SC
- API Service Classification CC/SD
- API Service Classification CC/SE
- API Service Classification CC/SF

Table 11. Recommended Motor Oil

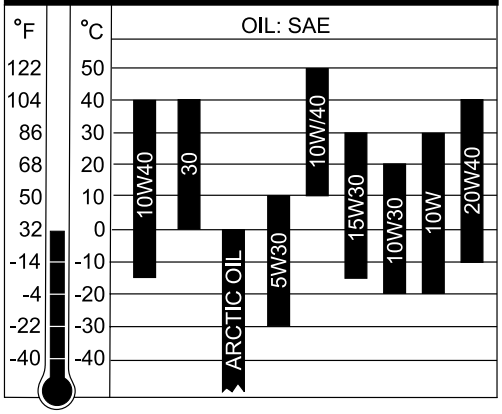

FUEL CHECK

DANGER

Fuel spillage on a **hot** engine can cause a **fire** or **explosion**. If fuel spillage occurs, wipe up the spilled fuel completely to prevent fire hazards. **NEVER** smoke around or near the generator.

Refilling the Fuel System

CAUTION

ONLY properly trained personnel who have read and understood this section should refill the fuel tank system.

This generator has a fuel tank located inside the trailer frame. (Figure 29). **ALWAYS** fill the fuel tank with clean fresh **#2 diesel fuel. DO NOT** fill the fuel tank beyond its capacity.

Pay attention to the fuel tank capacity when replenishing fuel. The fuel tank cap must be closed tightly after filling. Handle fuel in a safe container. If the container does not have a spout, use a funnel. Wipe up any spilled fuel immediately.

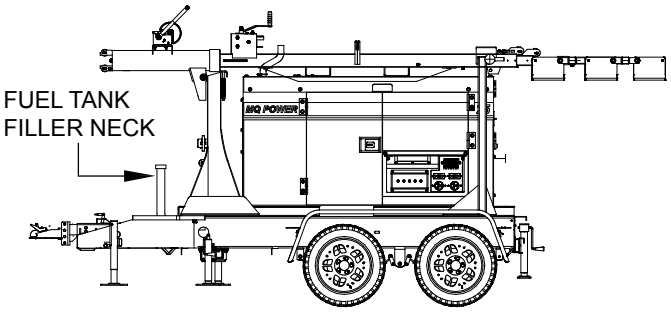

Figure 29. Trailer Fuel Tank

Refueling Procedure:

WARNING

Diesel fuel and its vapors are dangerous to your health and the surrounding environment. Avoid skin contact and/or inhaling fumes.

1. **Level Tanks** — Make sure fuel tank is level with the ground. Failure to do so will cause fuel to spill from the tank before reaching full capacity (Figure 30).

CAUTION

ALWAYS place trailer on firm level ground before refueling to prevent spilling and maximize the amount of fuel that can be pumped into the tank.

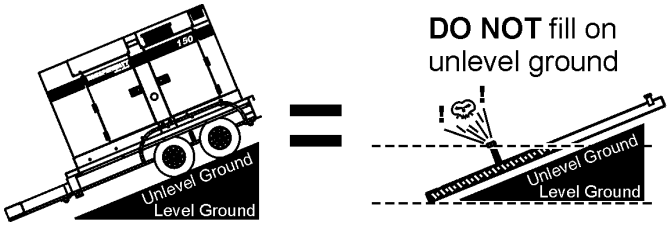

Figure 30. Only Fill on Level Ground

NOTICE

ONLY use **#2 diesel fuel** when refueling.

2. Remove fuel cap from filler neck and fill tank (Figure 29).
3. **NEVER overfill fuel tank** — It is important to read the fuel gauge when filling trailer fuel tank. **DO NOT** wait for fuel to rise in filler neck (Figure 31).

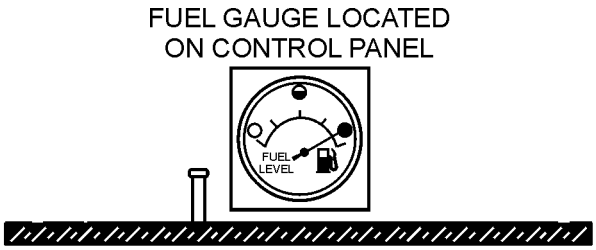

Figure 31. Full Fuel Tank

CAUTION

DO NOT OVERFILL fuel system. Leave room for fuel expansion. Fuel expands when heated (Figure 32).

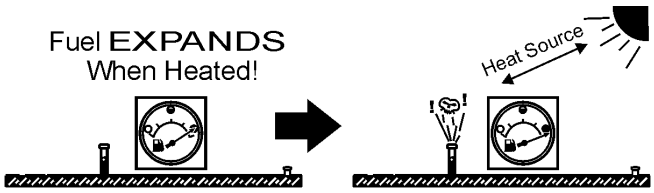

Figure 32. Fuel Expansion

COOLANT (ANTIFREEZE/SUMMER COOLANT/ WATER)

ISUZU recommends ISUZU antifreeze/summer coolant for use in their engines, which can be purchased in concentrate (and mixed with 50% demineralized water) or pre-diluted. See the **ISUZU Engine Owner's Manual** for further details.

WARNING

If adding coolant/antifreeze mix to the radiator, **DO NOT** remove the radiator cap until the unit has completely cooled. The possibility of **hot** coolant exists which can cause severe burns.

Day-to-day addition of coolant is done from the recovery tank. When adding coolant to the radiator, **DO NOT** remove the radiator cap until the unit has completely cooled. See Table 12 for engine, radiator, and recovery tank coolant capacities. Make sure the coolant level in the recovery tank is always between the "H" and the "L" markings.

Table 12. Coolant Capacity	
Engine and Radiator	1.74 gal (6.6 liters)
Reserve Tank	1 quart (0.9 liters)

Operation in Freezing Weather

When operating in freezing weather, be certain the proper amount of antifreeze (Table 13) has been added.

Table 13. Anti-Freeze Operating Temperatures				
Vol % Anti-Freeze	Freezing Point		Boiling Point	
	°C	°F	°C	°F
50	-37	-34	108	226

NOTICE

When the antifreeze is mixed with water, the antifreeze mixing ratio **must be** less than 50%.

CLEANING THE RADIATOR

The engine may overheat if the radiator fins become overloaded with dust or debris. Periodically clean the radiator fins with compressed air. Cleaning inside the machine is dangerous, so clean only with the engine turned off and the **negative** battery terminal disconnected.

AIR CLEANER

Periodic cleaning/replacement is necessary. Inspect it in accordance with the **ISUZU Engine Owner's Manual**.

FAN BELT TENSION

A slack fan belt may contribute to overheating, or to insufficient charging of the battery. Inspect the fan belt for damage and wear and adjust it in accordance with the **ISUZU Engine Owner's Manual.**

The fan belt tension is proper if the fan belt bends 10 to 15 mm (Figure 33) when depressed with the thumb as shown below.

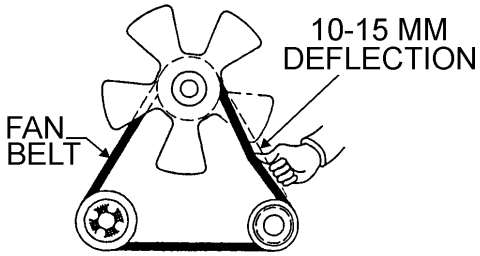

Figure 33. Fan Belt Tension

⚠ CAUTION

NEVER place hands near the belts or fan while the generator set is running.

BATTERY

This unit is of negative ground **DO NOT** connect in reverse. Always maintain battery fluid level between the specified marks. Battery life will be shortened, if the fluid level are not properly maintained. Add only distilled water when replenishment is necessary.

DO NOT over fill. Check to see whether the battery cables are loose. Poor contact may result in poor starting or malfunctions. **Always** keep the terminals firmly tightened. Coating the terminals with an approved battery terminal treatment compound. Replace battery with only recommended type battery.

The battery is sufficiently charged if the specific gravity of the battery fluid is 1.28 (at 68° F). If the specific gravity should fall to 1.245 or lower, it indicates that the battery is dead and needs to be recharged or replaced.

Before charging the battery with an external electric source, be sure to disconnect the battery cables.

Battery Cable Installation

ALWAYS be sure the battery cables (Figure 34) are properly connected to the battery terminals as shown below. The **red cable** is connected to the positive terminal of the battery, and the **black cable** is connected to the negative terminal of the battery.

⚠ CAUTION

ALWAYS disconnect the negative terminal **FIRST** and reconnect negative terminal **LAST**.

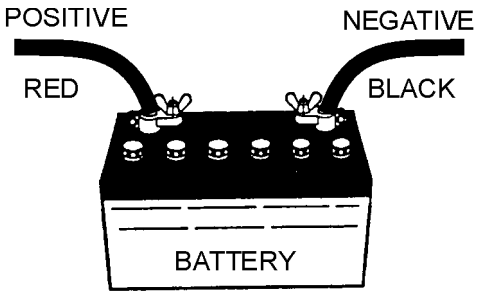

Figure 34. Battery Connections

When connecting battery do the following:

1. **NEVER** connect the battery cables to the battery terminals when ignition key is inserted.
2. Place a small amount of battery terminal treatment compound around both battery terminals. This will ensure a good connection and will help prevent corrosion around the battery terminals.

NOTICE

If the battery cable is connected incorrectly, electrical damage to the generator will occur. Pay close attention to the polarity of the battery when connecting the battery.

⚠ CAUTION

Inadequate battery connections may cause poor starting of the generator, and create other malfunctions.

ALTERNATOR

The polarity of the alternator is negative grounding type. When an inverted circuit connection takes place, the circuit will be in short circuit instantaneously resulting the alternator failure.

DO NOT put water directly on the alternator. Entry of water into the alternator can cause corrosion and damage the alternator.

WIRING

Inspect the entire generator for bad or worn electrical wiring or connections. If any wiring or connections are exposed (insulation missing) replace wiring immediately.

PIPING AND HOSE CONNECTION

Inspect all piping, oil hose, and fuel hose connections for wear and tightness. Tighten all hose clamps and check hoses for leaks.

If any hose (**fuel or oil**) lines are defective replace them immediately.

BEFORE STARTING

⚠ CAUTION

The engine's exhaust contains harmful emissions. **ALWAYS have adequate ventilation when operating.** Direct exhaust away from nearby personnel.

⚠ WARNING

NEVER manually start the engine with the **main, GFCI or auxiliary** circuit breakers in the **ON** (closed) position.

1. Place the **main, G.F.C.I., and aux.** circuit breakers (Figure 35) in the **OFF** position prior to starting the engine.

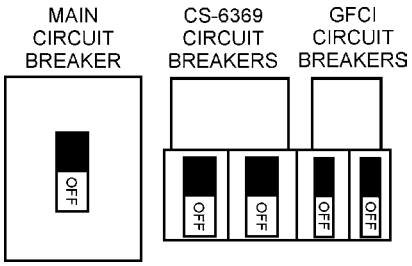

Figure 35. Main, Aux. and GFCI Circuit Breakers (OFF)

2. Make sure the **voltage change-over board** has been configured for the desired output voltage.
3. Connect the load to the **receptacles** or the **output terminal lugs** as shown in Figure 11. These load connection points can be found on the output terminal panel and the output terminal panel's hard wire hookup panel.
4. Tighten terminal nuts securely to prevent load wires from slipping out.
5. Close all engine enclosure doors (Figure 36).

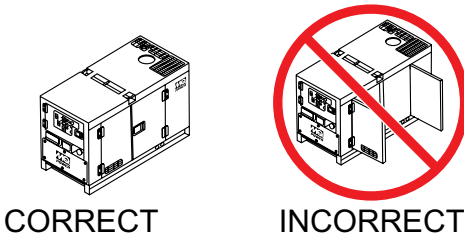

Figure 36. Engine Enclosure Doors

STARTING

1. Place the ***voltage selector switch*** in the desired voltage position (Figure 37)..

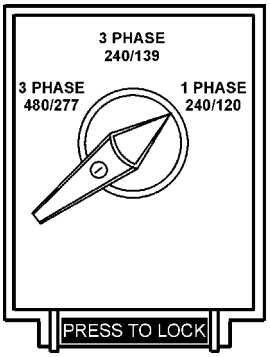

Figure 37. Voltage Selector Switch

STARTING (MANUAL)

1. In warm weather conditions, skip to step 3. In cold weather conditions, preheat the engine glow plugs by turning the ignition key (Figure 38) to the **RUN** position..

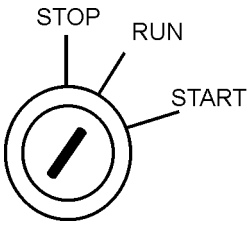

Figure 38. Ignition Switch Pre-Heat (Run Position)

2. Depending on the temperature of the coolant (cold weather conditions), the pre-heat lamp (Figure 39) will light (**ON**) and remain on until the pre-heating cycle has been completed. After completion of the pre-heating cycle, the light will go **OFF** and the engine will start up automatically.

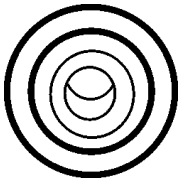

Figure 39. Pre-Heat Lamp

3. Turn the ignition key to the start position (Figure 40). Once the engine starts, release the ignition key and allow it to return to the **RUN** position (Figure 38).

   If the engine fails to start after 10 seconds, wait approximately 30 seconds and repeat steps 3-4.

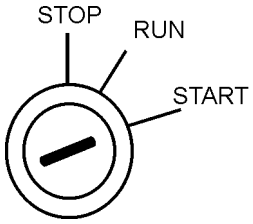

Figure 40. Ignition Switch (Start Position)

4. Let the engine run for 1-2 minutes. Listen for any abnormal noises. If any abnormalities exist, shut down the engine and correct the problem.
5. The generator's **frequency meter** (Figure 41) should be displaying the 60 cycle output frequency in **HERTZ.**

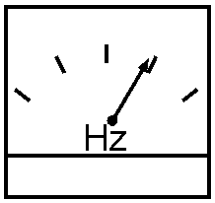

Figure 41. Frequency Meter

6. The generator's **AC-voltmeter** (Figure 42) will display the generator's output in **VOLTS**..

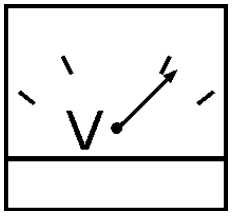

Figure 42. Voltmeter Meter

7. If the voltage is not within the specified tolerance use the voltage adjustment control knob (Figure 43) to increase or decrease the desired voltage.

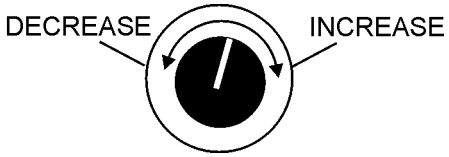

Figure 43. Voltage Adjust Control Knob

8. The ammeter (Figure 44) will indicate **zero amps** with no load applied. When a load is applied, the ammeter will indicate the amount of current that the load is drawing from the generator.

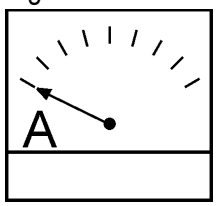

Figure 44. Ammeter (No Load)

9. The engine **oil pressure gauge** (Figure 45) will indicate the oil pressure of the engine. Under normal operating conditions the oil pressure is approximately 28 to 71 psi. (193~490 kPa).

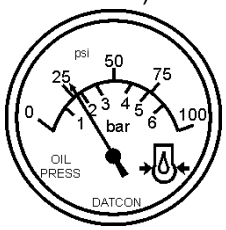

Figure 45. Oil Pressure Gauge

10. The **coolant temperature gauge** (Figure 46) will indicate the coolant temperature. Under normal operating conditions the coolant temperature should be between 165°~203°F (74°~95°C) (**Green Zone**).

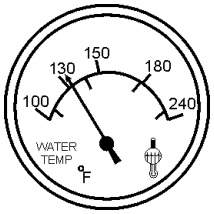

Figure 46. Coolant Temperature Gauge

11. The **tachometer gauge** (Figure 47) will indicate the speed of the engine when the generator is operating. Under normal operating conditions this speed is approximately 1800 RPM's.

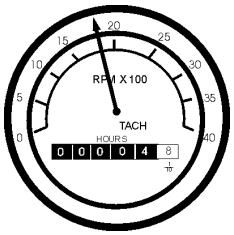

Figure 47. Engine Tachometer Gauge

12. Place the **main, GFCI, and aux.** circuit breakers in the **ON** position (Figure 48).

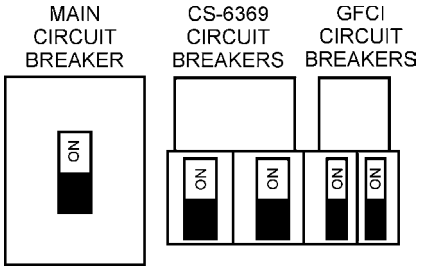

Figure 48. Main, Aux. and GFCI Circuit Breakers (ON)

13. Observe the generator's ammeter (Figure 49) and verify it reads the anticipated amount of current with respect to the load. The ammeter will only display a current reading if a load is in use.

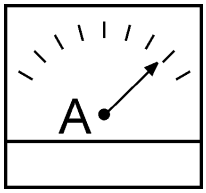

Figure 49. Ammeter (Load)

14. The generator will run until manually stopped or an abnormal condition occurs.

LIGHT TOWER OPERATION

NOTICE

For light tower operation, refer to the MLT25 Series Operation Manual (Part Number 49808).

NORMAL SHUTDOWN PROCEDURE

WARNING

NEVER stop the engine suddenly except in an emergency.

To shutdown the generator, use the following procedure:

1. Place both the **MAIN, GFCI and LOAD** circuit breakers as shown in Figure 50 to the **OFF** position.

.

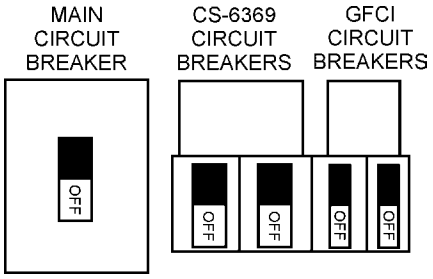

Figure 50. Main, GFCI and Load Circuit Breakers Off

2. Let the engine cool by running it at low speed for 3-5 minutes with no load applied.
3. Place the ignition switch (Figure 51) in the "**STOP**" position, remove the key and store in a safe place.

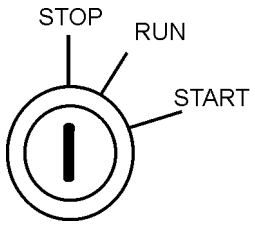

Figure 51. Ignition Switch (Stop Position)

4. Remove all loads from the generator.
5. Inspect entire generator for any damage or loosening of components that may have occurred during operation.

EMERGENCY SHUTDOWN PROCEDURE

1. Turn ignition switch key to the **STOP** position.
2. To shut-down the engine in the event of an emergency, switch the **MAIN**, **GFCI** and **LOAD** (Figure 50) circuit breakers to **OFF** position.

AUTOMATIC SHUT-DOWN SYSTEM

This unit is equipped with safety devices to automatically stop the engine in the event of low oil pressure, approximately 14 psi (97 kPa), or high water temperature, approximately 230° F (110° C). The alarm lamps on the Engine Control Panel illuminate to signify the reason for the shutdown.

NOTICE

Before inspecting, turn the ignition switch to the **STOP** position, place all circuit breakers in the **OFF** position and allow sufficient time for adequate cooling. When ready to restart, complete all steps in the Generator Startup Procedure section of this manual.

	Table 14. Inspection/Maintenance	10 Hrs DAILY	250 Hrs	500 Hrs	1000 Hrs
Engine	Check Engine Fluid Levels	X			
	Check Air Cleaner	X			
	Check Battery Acid Level	X			
	Check Fan Belt Condition	X			
	Check for Leaks	X			
	Check for Loosening of Parts	X			
	Replace Engine Oil and Filter * [1]		X		
	Clean Air Filter		X		
	Check Fuel Filter/Water Separator Bowl	X			
	Clean Unit, Inside and Outside		X		
	Change Fuel Filter			X	
	Clean Radiator and Check Coolant Protection Level*[2]			X	
	Replace Air Filter Element * [3]			X	
	Check all Hoses and Clamps * [4]				X
	Clean Inside of Fuel Tank				X
Generator	Measure Insulation Resistance Over 3M ohms		X		
	Check Rotor Rear Support Bearing			X	

*[1] Replace engine oil and filter at 100 hours, first time only.

*[2] Add "Supplemental Coolant Additives (SCA'S)" to recharge the engine coolant.

*[3] Replace primary air filter element when restriction indicator shows a vacuum of 625 mm (25 in. H20).

*[4] If blowby hose needs to be replaced, ensure that the slope of the blowby hose is at least a 1/2 inch per foot, with no sags or dips that could collect moisture and/or oil.

GENERAL INSPECTION

Prior to each use, the generator should be cleaned and inspected for deficiencies. Check for loose, missing or damaged nuts, bolts or other fasteners. Also check for fuel, oil, and coolant leaks. Use Table 14 as a general maintenance guideline **Engine Side** (Refer to the Engine Instruction Manual)

AIR CLEANER

Every 250 hours: Remove air cleaner element (Figure 52) and clean the heavy duty paper element with light spray of compressed air. Replace the air cleaner as needed.

Air Cleaner with Dust Indicator

This indicator (Figure 52) is attached to the air cleaner. When the air cleaner element is clogged, air intake restriction becomes greater and the dust indicator signal shows **RED** meaning the element needs changing or service. After changing the air element, press the dust indicator button to reset the indicator.

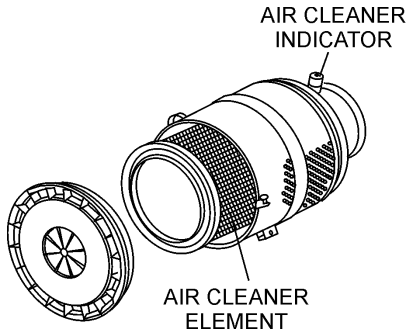

Figure 52. Air Cleaner/Indicator

NOTICE

The air filter should not be changed until the indicator reads **"RED"**. Dispose of old air filter. It may not be cleaned or reused.

If the engine is operating in very **dusty** or **dry grass** conditions, a clogged air cleaner will result. This can lead to a loss of power, excessive carbon buildup in the combustion chamber and high fuel consumption. Change air cleaner more **frequently** if these conditions exists.

FUEL ADDITION

Add diesel fuel (the grade may vary according to season and locations).

Removing Water from the Fuel Tank

After prolonged use, water and other impurities accumulate in the bottom of the tank. Occasionally inspect the fuel tank for water contamination and drain the contents if required.

During cold weather, the more empty volume inside the tank, the easier it is for water to condense. This can be reduced by keeping the tank full with diesel fuel.

Cleaning Inside the Fuel Tank

If necessary, drain the fuel inside the fuel tank completely. Using a spray washer (Figure 53) wash out any deposits or debris that have accumulated inside the fuel tank.

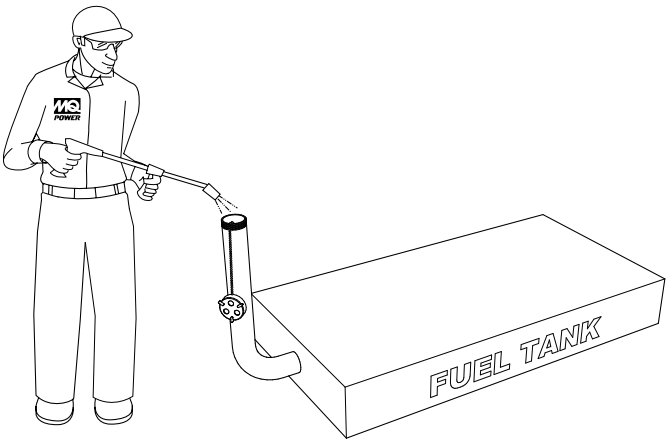

Figure 53. Fuel Tank Cleaning

FUEL TANK INSPECTION

In addition to cleaning the fuel tank, the following components should be inspected for wear:

- **Rubber Suspension** — look for signs of wear or deformity due to contact with oil. Replace the rubber suspension if necessary.
- **Fuel Hoses** — inspect nylon and rubber hoses for signs of wear, deterioration and hardening.
- **Fuel Tank Lining** — inspect the fuel tank lining for signs of excessive amounts of oil or other foreign matter.

Replacing Fuel Filter

- Replace the fuel filter cartridge with new one every 500 hours or so.
- Loosen the drain plug at the lower top of the fuel filter. Drain the fuel in the fuel body together with the mixed water. **DO NOT** spill the fuel during disassembly.
- Vent any air

AIR REMOVAL

If air enters the fuel injection system of a diesel engine, starting becomes impossible. After running out of fuel, or after disassembling the fuel system, bleed the system according to the following procedure. See the **ISUZU Engine Manual** for details.

To restart after running out of fuel, turn the switch to the "ON" position for 15-30 seconds. Try again, if needed.

CHECK OIL LEVEL

Check the crankcase oil level prior to each use, or when the fuel tank is filled. Insufficient oil may cause severe damage to the engine. Make sure the generator is level. The oil level must be between the two notches on the dipstick as shown in Figure 28.

Replacing Oil Filter

- Remove the old oil filter.
- Apply a film of oil to the gasket on the new oil filter.
- Install the new oil filter.
- After the oil cartridge has been replaced, the engine oil will drop slightly. Run the engine for a while and check for leaks before adding more oil if needed. Clean excessive oil from engine.

FLUSHING OUT RADIATOR AND REPLACING COOLANT

- Open both cocks located at the crankcase side and at the lower part of the radiator and drain coolant. Open the radiator cap while draining. Remove the overflow tank and drain.
- Check hoses for softening and kinks. Check clamps for signs of leakage.
- Tighten both cocks and replace the overflow tank.
- Replace with coolant as recommended by the engine manufacturer.
- Close radiator cap tightly.
- Flush the radiator by running clean tap water through radiator until signs of rust and dirt are removed. **DO NOT** clean radiator core with any objects, such as a screwdriver.

⚠ WARNING

Allow engine to **cool** when flushing out radiator. Flushing the radiator while hot could cause serious burns from water or steam.

RADIATOR CLEANING

The radiator (Figure 54) should be sprayed (cleaned) with a high pressure washer when excessive amounts of dirt and debris have accumulated on the cooling fins or tube. When using a high pressure washer, stand at least 5 feet (1.5 meters) away from the radiator to prevent damage to the fins and tube.

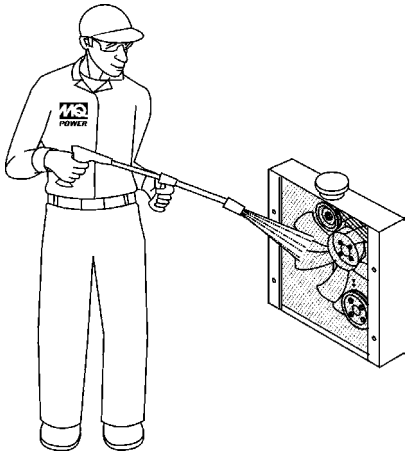

Figure 54. Radiator Cleaning

GENERATOR STORAGE

For long term storage of the generator the following is recommended:

- Drain the fuel tank completely. Treat with a fuel stabilizer if necessary.
- Completely drain the oil from the crankcase and refill if necessary with fresh oil.
- Clean the entire generator, internal and external.
- Cover the generating set and store in a clean, dry place.
- Disconnect the battery.
- Make sure engine coolant is at proper level.
- If generator is mounted on a trailer, jack trailer up and place on blocks so tires do not touch the ground or block and completely remove the tires.

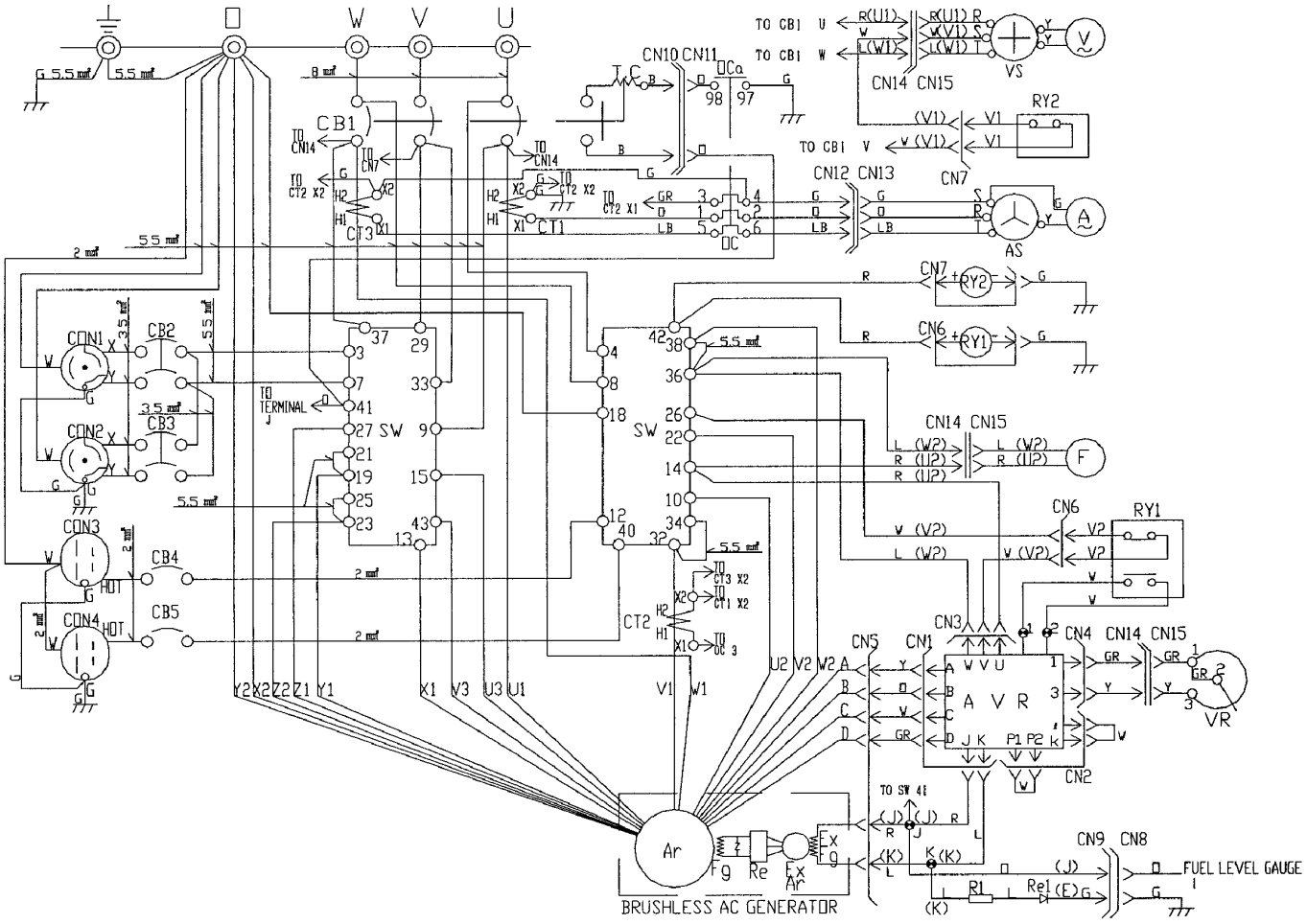

SYMBOL	DESIGNATION
Ar	MAIN GENERATOR ARMATURE WINDING
Fg	MAIN GENERATOR FIELD WINDING
ExAr	EXCITER ARMATURE WINDING
ExFg	EXCITER FIELD WINDING
Re	RECTIFIER
AVR	AUTOMATIC VOLTAGE REGULATOR
VR	VOLTAGE REGULATOR (RHEOSTAT)
CT 1,2,3	CURRENT TRANSFORMER
AS	CHANGE-OVER SWITCH,AMMETER
A	AC.AMMETER
VS	CHANGE-OVER SWITCH,VOLTMETER
V	AC.VOLTMETER
F	FREQUENCY METER
CB1	CIRCUIT BREAKER, 60A
CB2, 3	CIRCUIT BREAKER, 50A
CB4, 5	CIRCUIT BREAKER, 20A
CON1, 2	RECEPTACLE, CS6369
CON3, 4	RECEPTACLE, GF-530EM
OC	OVER CURRENT RELAY
SW	SELECTOR SWITCH
RY1,2	RELAY UNIT
R1	RESISTOR
Re1	RECTIFIER
⊗	TERMINAL JK

CONNECTOR ARRANGEMENT
(WIRING VIEW)

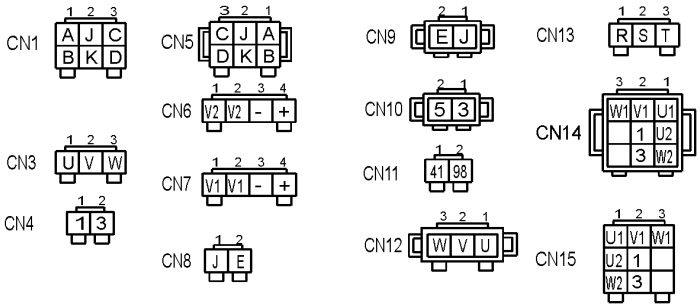

Figure 55. Generator Wiring Diagram

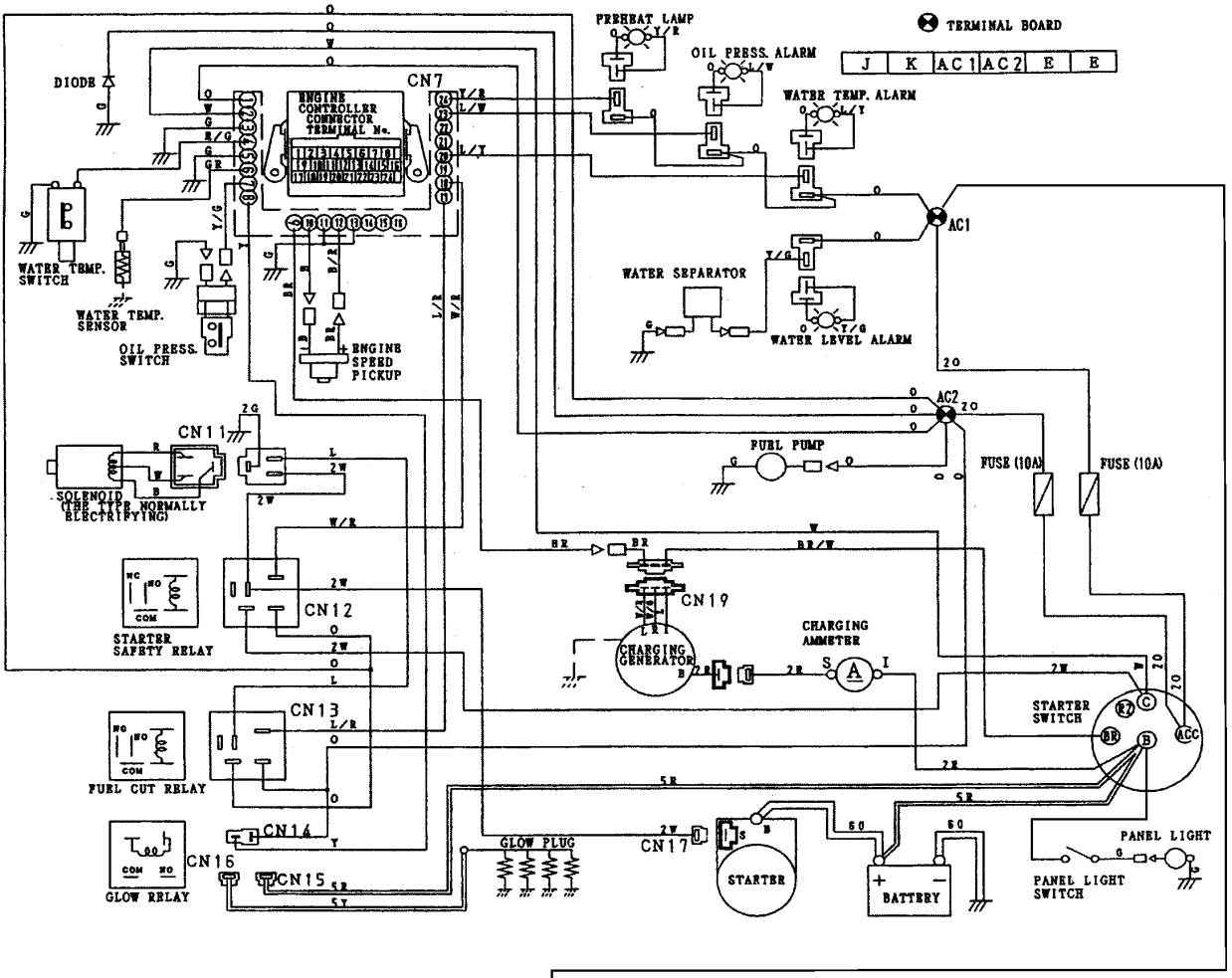

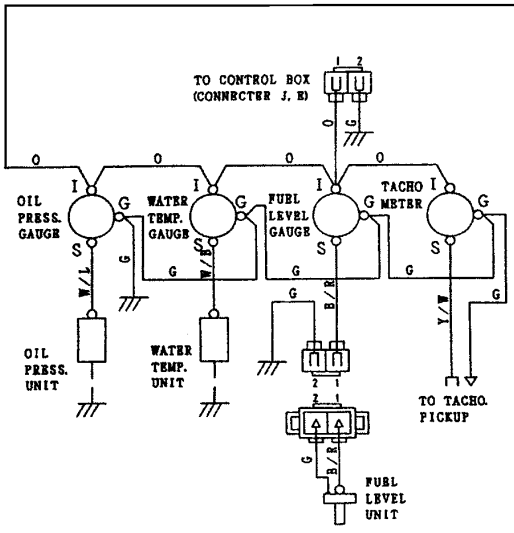

COLOR CODE			
SYM.	WIRE COLOR	SYM.	WIRE COLOR
B	BLACK	R	RED
L	BLUE	W	WHITE
BR	BROWN	Y	YELLOW
G	GREEN	LB	LIGHT BLUE
GR	GRAY	LG	LIGHT GREEN
V	VIOLET	O	ORANGE
P	PINK		

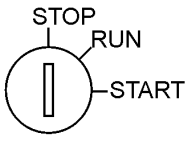

KEY CONNECTION DIAGRAM					
	B	ACC	R2	C	BR
STOP	○				
RUN	○	○			○
START	○	○	○	○	○

Figure 56. Engine Wiring Diagram

Practically all breakdowns can be prevented by proper handling and maintenance inspections, but in the event of a breakdown, use Table 15 shown below for diagnosis of the Generator. If the problem cannot be remedied, consult our company's business office or service plant.

Table 15. Generator Troubleshooting

Symptom	Possible Problem	Solution
No Voltage Output	AC Voltmeter defective?	Check output voltage using a voltmeter.
	Is wiring connection loose?	Check wiring and repair.
	Is AVR defective?	Replace if necessary.
	Defective Rotating Rectifier?	Check and replace.
	Defective Exciter Field?	Check for approximately 17.3 ohms across J & K on CN1
Low Voltage Output	Is engine speed correct?	Turn engine throttle lever to "High".
	Is wiring connections loose?	Check wiring and repair.
	Defective AVR?	Replace if necessary.
High Voltage Output	Is wiring connections loose?	Check wiring and repair.
	Defective AVR?	Replace if necessary.
Circuit Breaker Tripped	Short Circuit in load?	Check load and repair.
	Over current?	Confirm load requirements and reduce.
	Defective circuit breaker?	Check and replace.
	Over current Relay actuated?	Confirm load requirement and replace.

EXPLANATION OF CODE IN REMARKS COLUMN

The following section explains the different symbols and remarks used in the Parts section of this manual. Use the help numbers found on the back page of the manual if there are any questions.

NOTICE

The contents and part numbers listed in the parts section are subject to change **without notice**. Multiquip does not guarantee the availability of the parts listed.

SAMPLE PARTS LIST

NO.	PART NO.	PART NAME	QTY.	REMARKS
1	12345	BOLT	1	INCLUDES ITEMS W/%
2%		WASHER, 1/4 IN		NOT SOLD SEPARATELY
2%	12347	WASHER, 3/8 IN	1	MQ-45T ONLY
3	12348	HOSE	A/R	MAKE LOCALLY
4	12349	BEARING	1	S/N 2345B AND ABOVE

NO. Column

Unique Symbols — All items with same unique symbol

(@, #, +, %, or >) in the number column belong to the same assembly or kit, which is indicated by a note in the "Remarks" column.

Duplicate Item Numbers — Duplicate numbers indicate multiple part numbers, which are in effect for the same general item, such as different size saw blade guards in use or a part that has been updated on newer versions of the same machine.

NOTICE

When ordering a part that has more than one item number listed, check the remarks column for help in determining the proper part to order.

PART NO. Column

Numbers Used — Part numbers can be indicated by a number, a blank entry, or TBD.

TBD (To Be Determined) is generally used to show a part that has not been assigned a formal part number at the time of publication.

A blank entry generally indicates that the item is not sold separately or is not sold by Multiquip. Other entries will be clarified in the "Remarks" Column.

QTY. Column

Numbers Used — Item quantity can be indicated by a number, a blank entry, or A/R.

A/R (As Required) is generally used for hoses or other parts that are sold in bulk and cut to length.

A blank entry generally indicates that the item is not sold separately. Other entries will be clarified in the "Remarks" Column.

REMARKS Column

Some of the most common notes found in the "Remarks" Column are listed below. Other additional notes needed to describe the item can also be shown.

Assembly/Kit — All items on the parts list with the same unique symbol will be included when this item is purchased.

Indicated by:

"INCLUDES ITEMS W/(unique symbol)"

Serial Number Break — Used to list an effective serial number range where a particular part is used.

Indicated by:

"S/N XXXXX AND BELOW"
"S/N XXXX AND ABOVE"
"S/N XXXX TO S/N XXX"

Specific Model Number Use — Indicates that the part is used only with the specific model number or model number variant listed. It can also be used to show a part is NOT used on a specific model or model number variant.

Indicated by:

"XXXXX ONLY"
"NOT USED ON XXXX"

"Make/Obtain Locally" — Indicates that the part can be purchased at any hardware shop or made out of available items. Examples include battery cables, shims, and certain washers and nuts.

"Not Sold Separately" — Indicates that an item cannot be purchased as a separate item and is either part of an assembly/kit that can be purchased, or is not available for sale through Multiquip.

DCA25SSIU3 WHISPERWATT GENERATOR (USED WITH MLT25 LIGHT TOWER) WITH ISUZU BV-4LE2 DIESEL ENGINE

1 to 3 units

QTY.	P/N	DESCRIPTION
5	2944566410	CARTRIDGE , OIL FILTER
5	8990374810	FILTER, FUEL, ELEMENT
5	8944370220	REPAIR KIT,FUEL PUMP
3	0602046611	ELEMENT, AIR
1	8972606490	BELT, FAN
1	B1312500403	RADIATOR HOSE, UPPER
1	B1312500503	RADIATOR HOSE, LOWER
1	0601820602	AUTOMATIC VOLTAGE REGULATOR
1	0602122272	UNIT, OIL PRESSURE
1	0602123275	UNIT, WATER TEMPERATURE
1	1824100990	OIL SWITCH (ENGINE SIDE)
1	8973022030	WATER SWITCH (ENGINE SIDE)
3	8944024980	KEY, IGNITION

NOTICE

Part numbers on this Suggested Spare Parts list may supersede/replace the P/N shown in the text pages of this book.

GENERATOR ASSY.

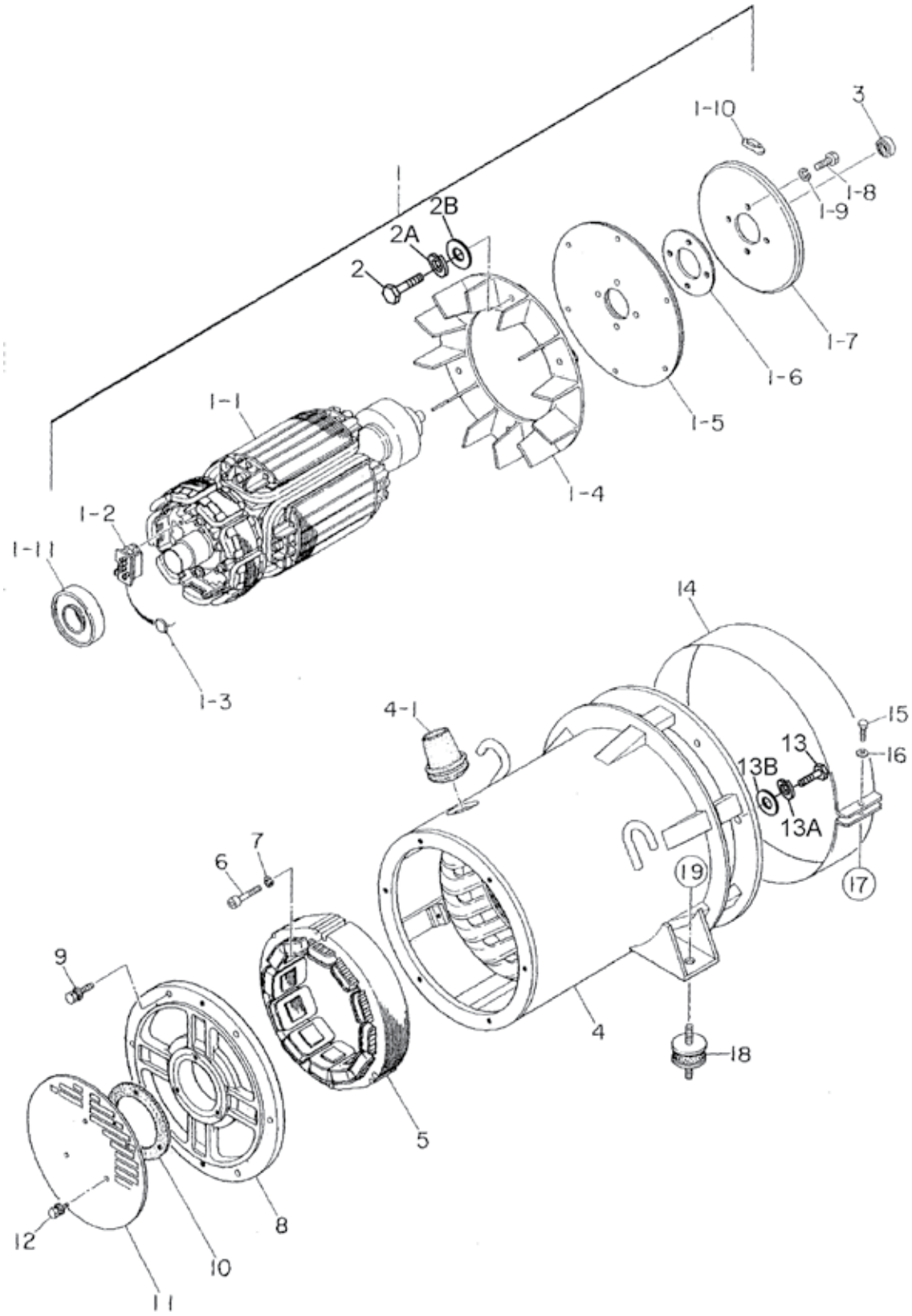

NO.	PART NO.	PART NAME	QTY.	REMARKS
1	B1110200602	ROTOR ASSY	1	
1-1		FIELD ASSY	1	
1-2	7961025004	RECTIFIER	1	
1-3	0601822630	SURGE ABSORBER	1	
1-4	8001070003	FAN	1	
1-5	8351611004	COUPLING DISK	2	
1-6	8351612004	WASHER, COUPLING HUB	1	
1-7	B1112300003	BALANCING PLATE	1	.... WHEN ORDERING, PURCHASE ITEM 1-10
1-8	0010310025	HEX HEAD BOLT	4	
1-9	0042510000	WASHER, LOCK	4	
1-10	0601000209	BALANCING WEIGHT KIT	1	
1-11	0071906308	BEARING, 6308DDU	1	
2	0010308035	HEX HEAD BOLT	6	
2A	0040008000	WASHER, LOCK	6	
2B	0041208000	WASHER, FLAT	6	
3	0070506803	BEARING, 6803ZZ	1	
4	B1130201103	STATOR ASSY	1	
4-1	0845041904	GROMMET	1	
5	B1138000003	FIELD ASSY EXCITER	1	
6	0016008045	HEX HD. CAP SCREW	3	
7	0042508000	WASHER, LOCK	3	
8	8351315003	END BRACKET	1	
9	0017108035	HEX HEAD BOLT	6	
10	8351312004	PACKING	1	
11	8351331004	COVER, SUCTION	1	
12	0017106016	HEX HEAD BOLT	3	
13	0010310030	HEX HEAD BOLT	6	
13A	0040010000	WASHER, LOCK	6	
13B	0041210000	WASHER, FLAT	6	
14	B0155400204	COVER, FAN	1	
15	0010106030	HEX HEAD BOLT	1	
16	0041206000	WASHER, FLAT	1	
17	0600815000	NUT	1	
18	M9312600004	RUBBER SUSPENSION	2	
19	0207010000	SELF - LOCKING NUT	2	

CONTROL BOX ASSY.

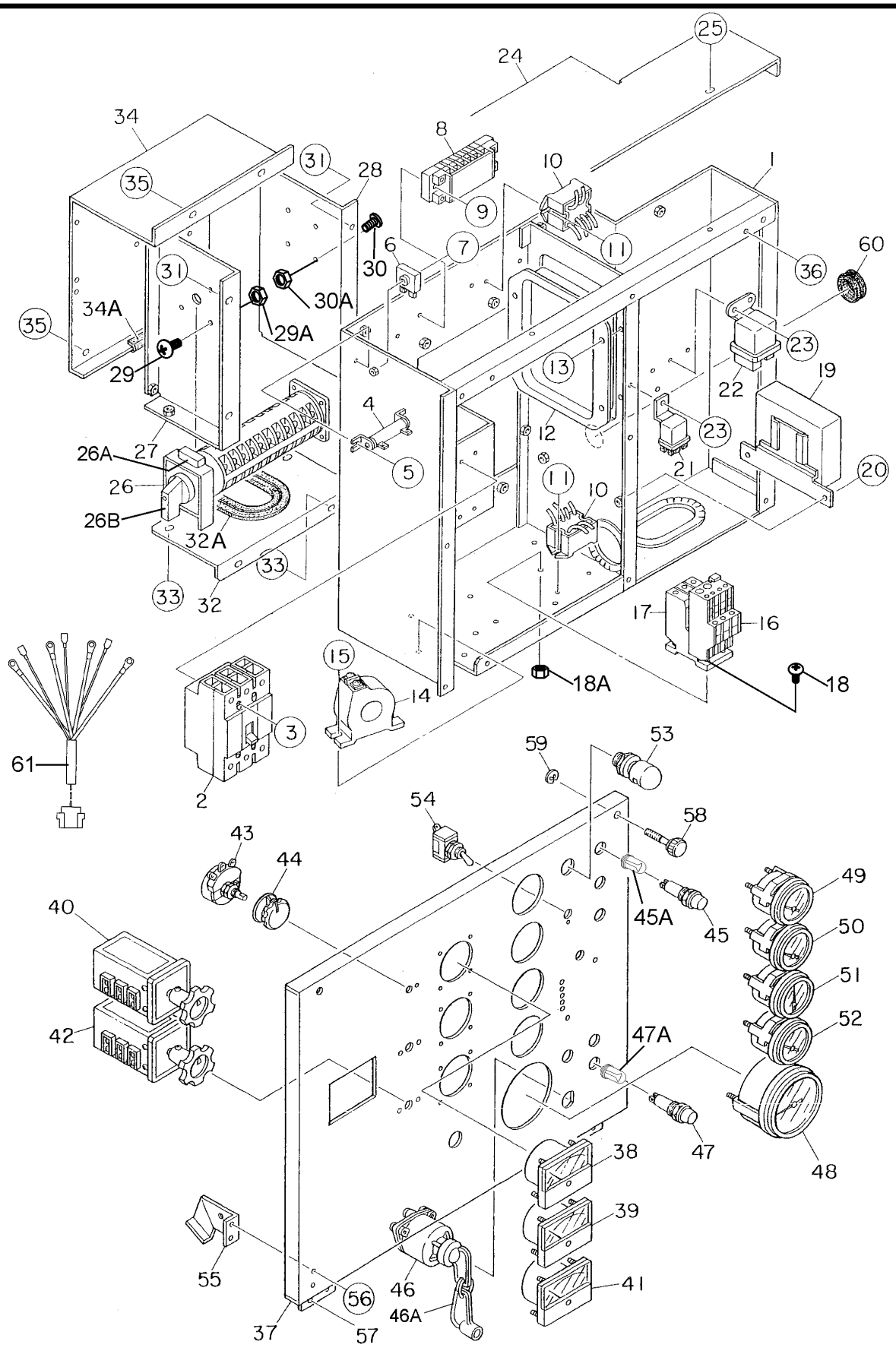

NO.	PART NO.	PART NAME	QTY.	REMARKS
1	M1213001102	CONTROL BOX	1	
2	0601870430	CIRCUIT BREAKER 3P, 60AMPS	1	
3	0021004075	MACHINE SCREW	4	
4	0601842384	RESISTOR, 20W 50 OHM	1	
5	0021004010	MACHINE SCREW	2	
6	0601823240	RECTIFIER	2	
7	0027104030	MACHINE SCREW	1	
8	0601815759	TERMINAL BOARD	1	
9	0027104020	MACHINE SCREW	2	
10	0601823863	RELAY UNIT	2	
11	0027104016	MACHINE SCREW	4	
12	0601820602	AUTOMATIC VOLTAGE REGULATOR	1	
13	0027105016	MACHINE SCREW	4	
14	0601801122	CURRENT TRANSFORMER	3	
15	0027106020	MACHINE SCREW	6	
16	0601820847	OVER CURRENT RELAY	1	
17	0601820848	OVER CURRENT RELAY	1	
18	0027104016	MACHINE SCREW	2	
18A	0207004000	SELF-LOCKING NUT	2	
19	8973259120	ENGINE CONTROLLER	1	REPLACES P/N 0602202523
20	0016906016	HEX HEAD BOLT	2	
21	5825500290	RELAY	2	REPLACES P/N 0602201400
22	I8942481610	GLOW RELAY	1	REPLACES P/N 0602202502
23	0027105016	MACHINE SCREW	4	
24	M1213500503	CONTROL BOX COVER	1	
25	0016906016	HEX HEAD BOLT	4	
26	M1270100004	SELECTOR SWITCH	1	
26A	M1550002704	DECAL : SELECTOR SWITCH NUMBER	1	
26B	M1550002804	DECAL : SELECTOR SWITCH NUMBER	1	
27	M1213601804	SWITCH BRACKET	1	
28	M1213601904	SWITCH BRACKET	1	
29	0021104035	MACHINE SCREW	4	
29A	0207004000	SELF- LOCKING NUT	4	
30	0027104016	MACHINE SCREW	4	
30A	0207004000	SELF-LOCKING NUT	4	
31	0016906016	HEX HEAD BOLT	4	
32	M1213602104	SWITCH COVER	1	
32A	0317700200	SEAL RUBBER	1	
33	0016906016	HEX HEAD BOLT	4	
34	M1213602004	SWITCH COVER	1	
34A	0330000070	SEAL RUBBER	1	
35	0016906016	HEX HEAD BOLT	6	
36	0016906016	HEX HEAD BOLT	10	
37	M1223000703	CONTROL PANEL	1	

CONTROL BOX ASSY.

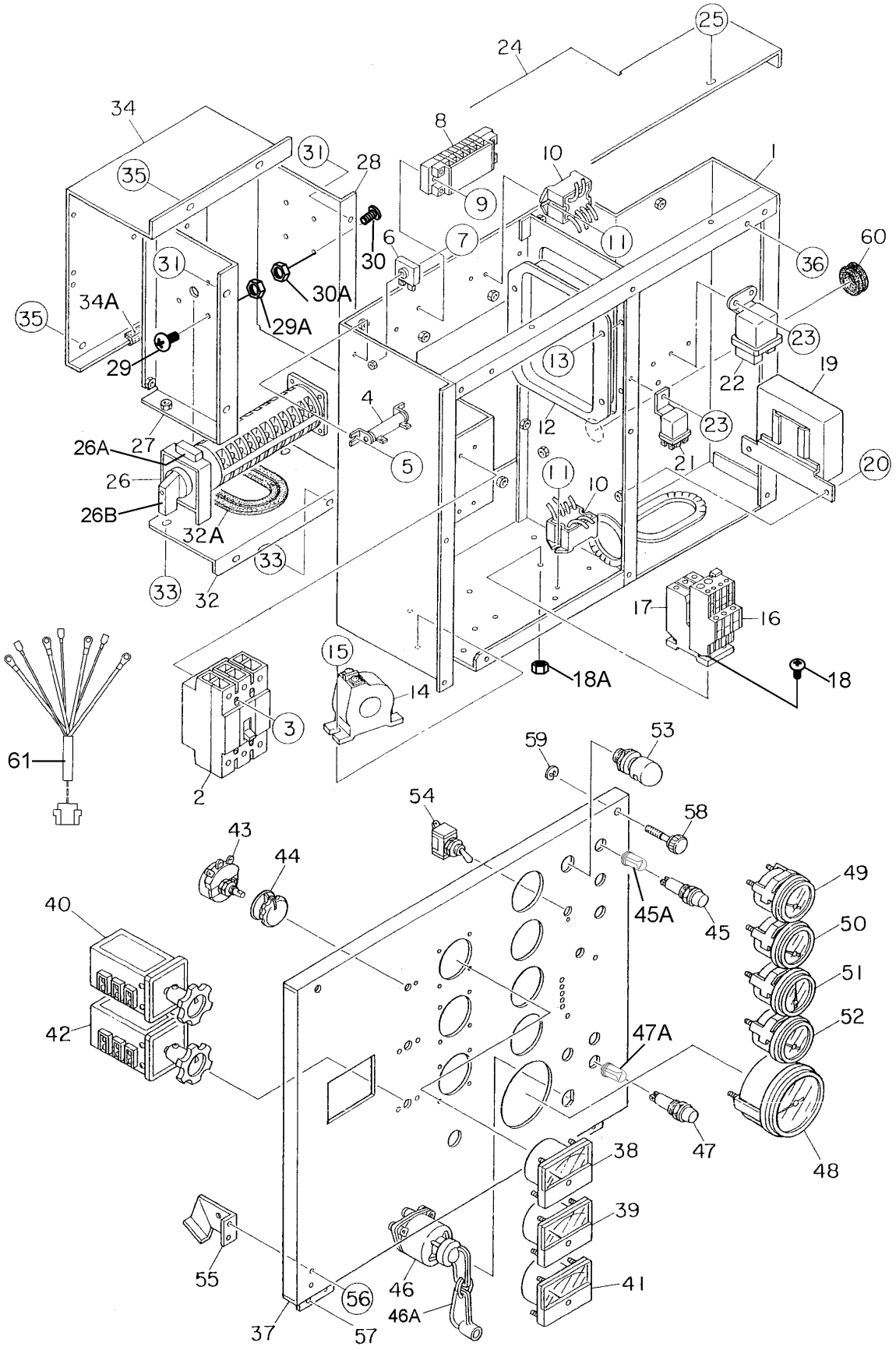

NO.	PART NO.	PART NAME	QTY.	REMARKS
38	0601807641	FREQUENCY METER, 45~65Hz 240V	1	
39	0601808985	AC AMMETER, 0~50A/100A:5A	1	
40	0601801040	CHANGE- OVER SWITCH, AMMMETER	1	
41	0601806859	AC VOLTMETER, 0~600V	1	
42	0601801041	CHANGE- OVER SWITCH, VOLTMETER	1	
43	0601840073	RHEOSTAT (VR), 2W 1K OHM	1	
44	0601840121	KNOB	1	
45	0602103092	ALARM LAMP	3	
45A	0601810245	BULB, DC18V	3	
46	8970444180	STARTER SWITCH	1	REPLACES P/N 0602100009
46A	8944024980	KEY, IGNITION	1	
47	0602103092	PREHEAT LAMP	1	
47A	0601810245	BULB, DC18V	1	
48	0602120095	TACHOMETER	1	
49	0602122093	OIL PRESSURE GAUGE	1	
50	0602123090	WATER TEMPERATURE GAUGE	1	
51	0602121080	CHARGING AMMETER	1	
52	0602125090	FUEL GAUGE	1	
53	0601810141	PANEL LIGHT	1	
54	0601831330	SWITCH, PANEL LIGHT	1	
55	M1223100104	STOPPER	1	
56	0027105010	MACHINE SCREW	2	
57	0027105010	MACHINE SCREW	4	
58	M9220100004	SET SCREW	2	
59	0080200007	SNAP RING	2	
60	0601851727	GROMMET	1	
61	M1246702904	WIRE HARNESS, GENERATOR	1	

ENGINE AND RADIATOR ASSY.

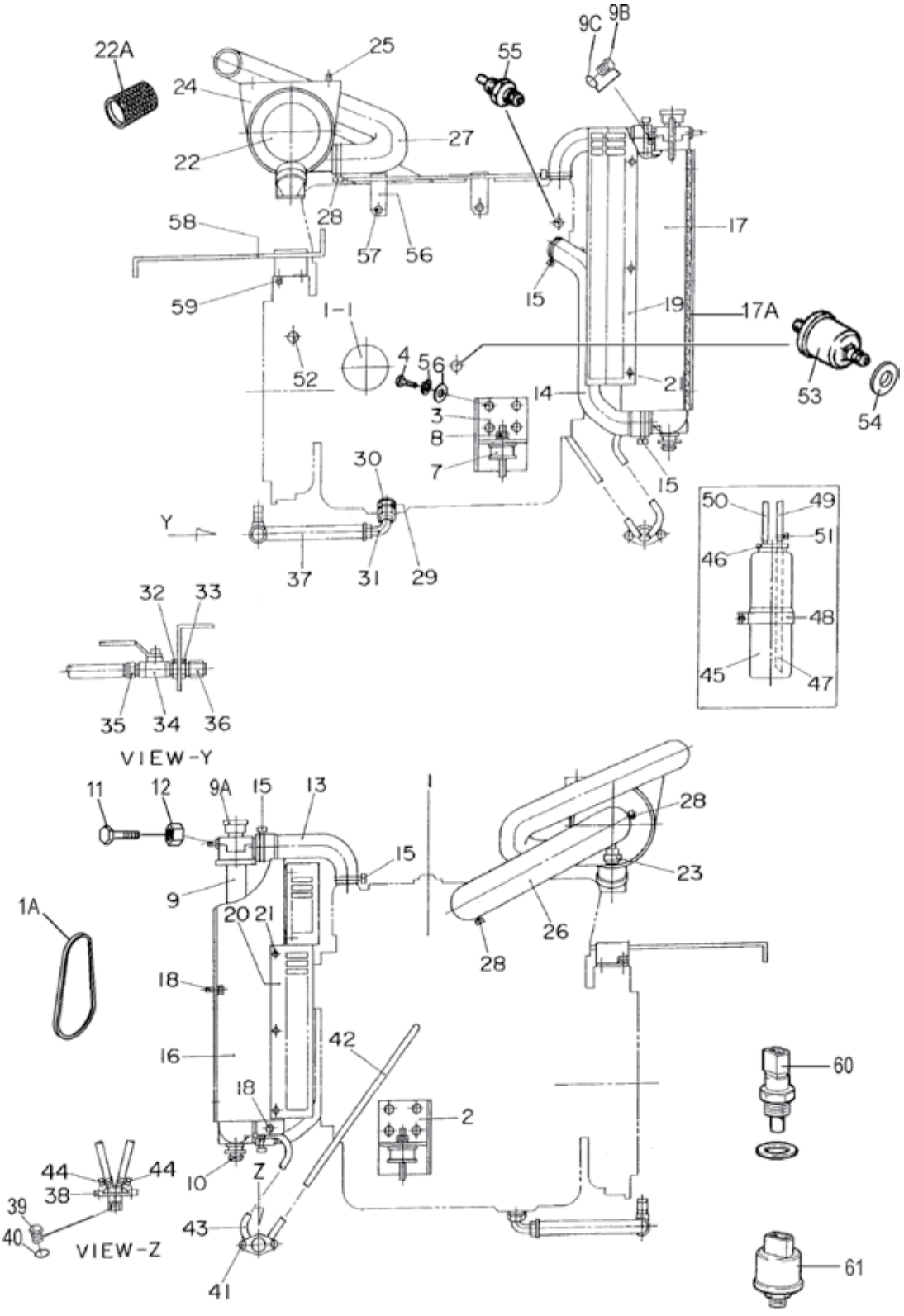

NO.	PART NO.	PART NAME	QTY.	REMARKS
1	M1923200104	ENGINE, ISUZU 4LE2	1	
1A	8972606490	FAN BELT	1	REPLACES P/N 8972249990
1-1	2944566410	CARTRIDGE, OIL FILTER	1	
2	M1303200304	ENGINE FOOT	1	
3	M1305200204	ENGINE FOOT	1	
4	0010310025	HEX HEAD BOLT	8	
5	0040010000	WASHER, LOCK	8	
6	0041210000	WASHER, FLAT	8	
7	0605000066	RUBBER SUSPENSION	2	
8	0207010000	SELF-LOCKING NUT	2	
9	M1923200094	RADIATOR	1	
9A	0602011079	CAP, RADIATOR	1	
9B	M9200100904	PLUG	1	
9C	0150000016	O-RING	1	
10	M9312200104	MOUNT RUBBER	2	
11	0016908040	HEX HEAD BOLT	2	
12	0207008000	SELF-LOCKING NUT	2	
13	B1312500403	RADIATOR HOSE, UPPER	1	REPLACES P/N M1310500803
14	B1312500503	RADIATOR HOSE, LOWER	1	REPLACES P/N M1310500903
15	0605515149	HOSE BAND	4	
16	M1310200003	FAN SHROUD	1	
17	M1310200103	FAN SHROUD	1	
17A	M1493105004	ACOUSTIC SHEET	1	
18	0015908020	HEX HEAD BOLT	8	
19	M1310300703	FAN GUARD	1	
20	M1310300803	FAN GUARD	1	
21	0016908020	HEX HEAD BOLT	8	
22	0602046580	AIR CLEANER	1	
22A	0602046611	ELEMENT, AIR CLEANER	1	REPLACES P/N 0602046321
23	0602040651	INDICATOR, AIR CLEANER	1	
24	0602040552	BRACKET, AIR CLEANER	1	
25	0016908030	HEX HEAD BOLT	2	
26	M1373100303	HOSE, AIR CLEANER	1	
27	M1373100503	HOSE, AIR CLEANER	1	
28	0605515147	HOSE BAND	3	
29	0602022587	ADAPTER	1	
30	M1320300304	PACKING	1	
31	0602022579	90 DEGREE ELBOW	1	
32	0603306597	CONNECTOR	1	
33	0603300286	ROCKNUT	1	
34	0605511399	VALVE	1	
35	0603306399	HOSE JOINT	1	
36	0602021071	CAP	1	
37	0379500280	DRAIN HOSE	1	
38	M9602000003	DRAIN JOINT	1	

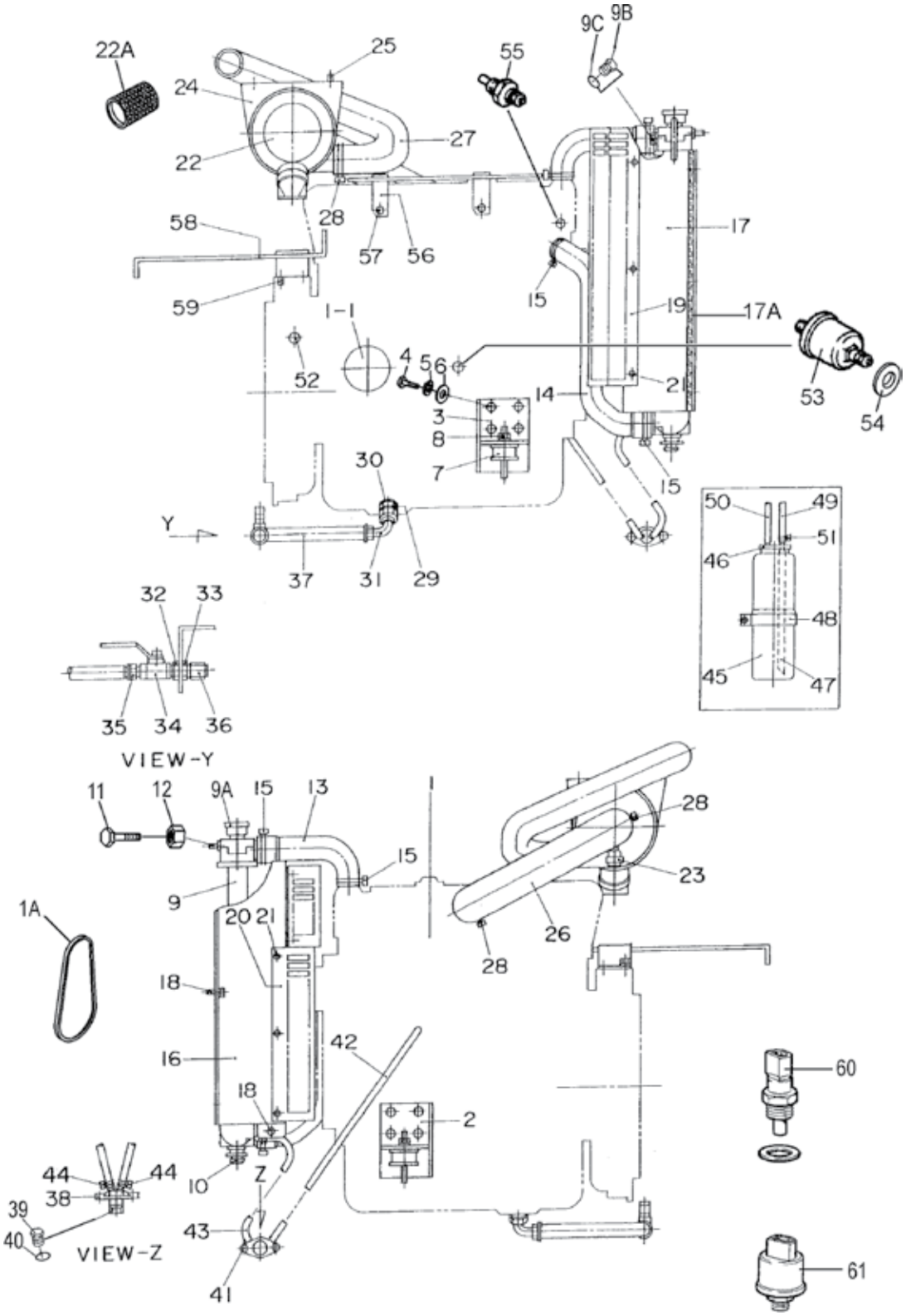
22A
24
25
55
9C
9B
22
27
58
28
57
56
17
59
15
19
17A
1-1
52
4
56
14
21
53
54
3
8
7
30
15
Y
37
31
29
50
49
51
46
48
45
47
32
33
35
34
36
VIEW-Y
11
12
9A
15
13
1
28
15
23
9
1A
20
21
26
28
18
16
42
60
18
2
44
44
38
10
Z
39
40
43
VIEW-Z
41
61

NO.	PART NO.	PART NAME	QTY.	REMARKS
39	M9200200004	PLUG	1	
40	0150000018	O-RING	1	
41	0016906020	HEX HEAD BOLT	2	
42	0199900600	DRAIN HOSE	1	
43	0199900500	DRAIN HOSE	1	
44	0605515106	HOSE BAND	4	
45	M9300000003	RESERVE TANK	1	
46	M9300100003	CAP, RESERVE TANK	1	
47	0199100215	HOSE	1	
48	M1317100004	BRACKET, RESERVE TANK	1	
49	0199100350	HOSE	1	
50	0193600850	HOSE	1	
51	0605515106	HOSE BAND	2	
52	0602120481	PICK UP TACHOMETER	1	
53	0602122272	UNIT, OIL PRESSURE	1	
54	M9200100004	ADAPTER	1	
55	0602123275	UNIT, WATER TEMPERATURE	1	
56	M1353800004	CLAMPER ROD	1	
57	0016908020	HEX HEAD BOLT	2	
58	M1357300104	CLAMPER ROD	1	
59	0016910020	HEX HEAD BOLT	2	
60	8973022030	WATER TEMP. SWITCH (ENGINE)	1	
61	1824100990	OIL PRESSURE SWITCH (ENGINE)	1	

OUTPUT TERMINAL ASSY.

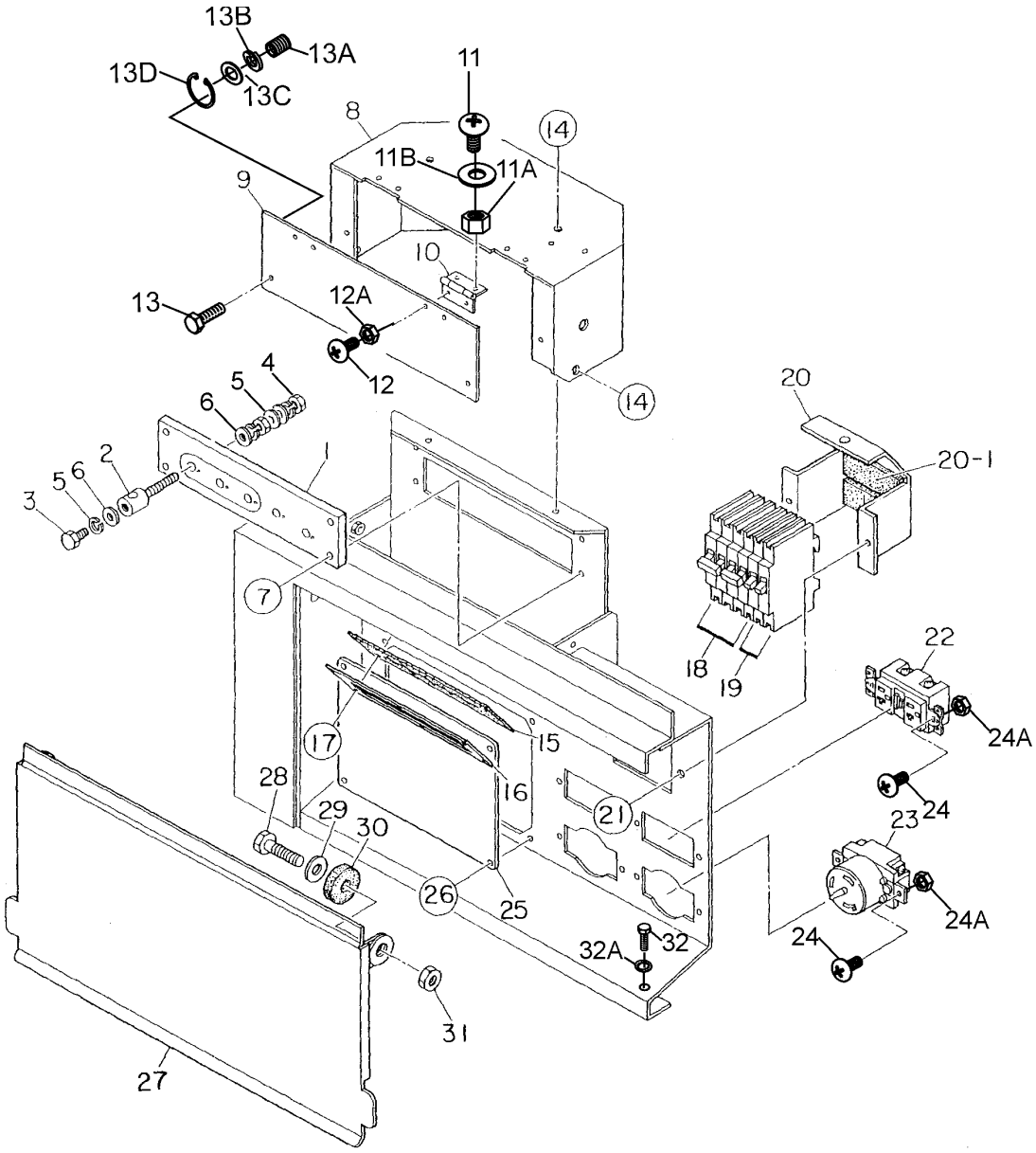

ADD THE FOLLOWING DIGITS AFTER THE PART NUMBER WHEN ORDERING ANY PAINTED PANEL TO INDICATE COLOR OF UNIT:	
1-ORANGE	5-BLACK
2-WHITE	6-CATERPILLAR YELLOW
3-SPECTRUM GREY	7-CATO GOLD
4-SUNBELT GREEN	8-RED

THE SERIAL NUMBER MAY BE REQUIRED.

OUTPUT TERMINAL ASSY.

NO.	PART NO.	PART NAME	QTY.	REMARKS
1	M1230700003	TERMINAL PANEL	1	
2	M9220000004	OUTPUT TERMINAL BOLT	5	
3	M9220000104	TIE BOLT	5	
4	0039308000	HEX BRASS NUT	10	
5	0040008000	WASHER, LOCK	15	
6	0041408000	WASHER, FLAT	20	
7	0016906020	HEX HEAD BOLT	4	
8	M1236101503	TERMINAL COVER	1	
9	M1236100404	OUTPUT WINDOW	1	
10	0605010040	HINGE	2	
11	0027103010	MACHINE SCREW	4	
11A	0030003000	HEX HEAD NUT	4	
11B	0041203000	WASHER, FLAT	4	
12	0027103010	MACHINE SCREW	4	
12A	0030003000	HEX HEAD NUT	4	
13	0016906020	HEX HEAD BOLT	2	
13A	M9220100804	SET SCREW	2	
13B	0040006000	WASHER, LOCK	2	
13C	0041206000	WASHER, FLAT	2	
13D	0080200005	RETAINING RING	2	
14	0016906016	HEX HEAD BOLT	4	
15	M1236400004	CABLE OUTLET COVER	1	
16	M1236300004	SUPPORTER, CABLE OUTLET COVER	1	
17	0016906020	HEX HEAD BOLT	6	
18	0601870441	CIRCUIT BREAKER, 2P 50A	2	
19	0601870440	CIRCUIT BREAKER, 1P 20A	2	
20	M1260700404	BREAKER FITTING COVER	1	
20-1	0222100080	CUSHION RUBBER	2	
21	0016906020	HEX HEAD BOLT	2	
22	0601812598	RECEPTACLE, GF-530EM 125V 20AX2	2	
23	0601814014	RECEPTACLE,CS6369 250V 50A	2	
24	0027104016	MACHINE SCREW	8	
24A	0207004000	SELF- LOCKING NUT	8	
25	M1236400104	COVER	1	
26	0016906016	HEX HEAD BOLT	4	
27	M1236100503	TERMINAL COVER	1	
28	0010112045	HEX HEAD BOLT	2	
29	0041212000	WASHER, FLAT	2	
30	M9310200004	STAY RUBBER	2	
31	0030012000	HEX HEAD NUT	2	
32	0019208020	HEX HEAD NUT	1	
32A	0040508000	TOOTHED WASHER	1	

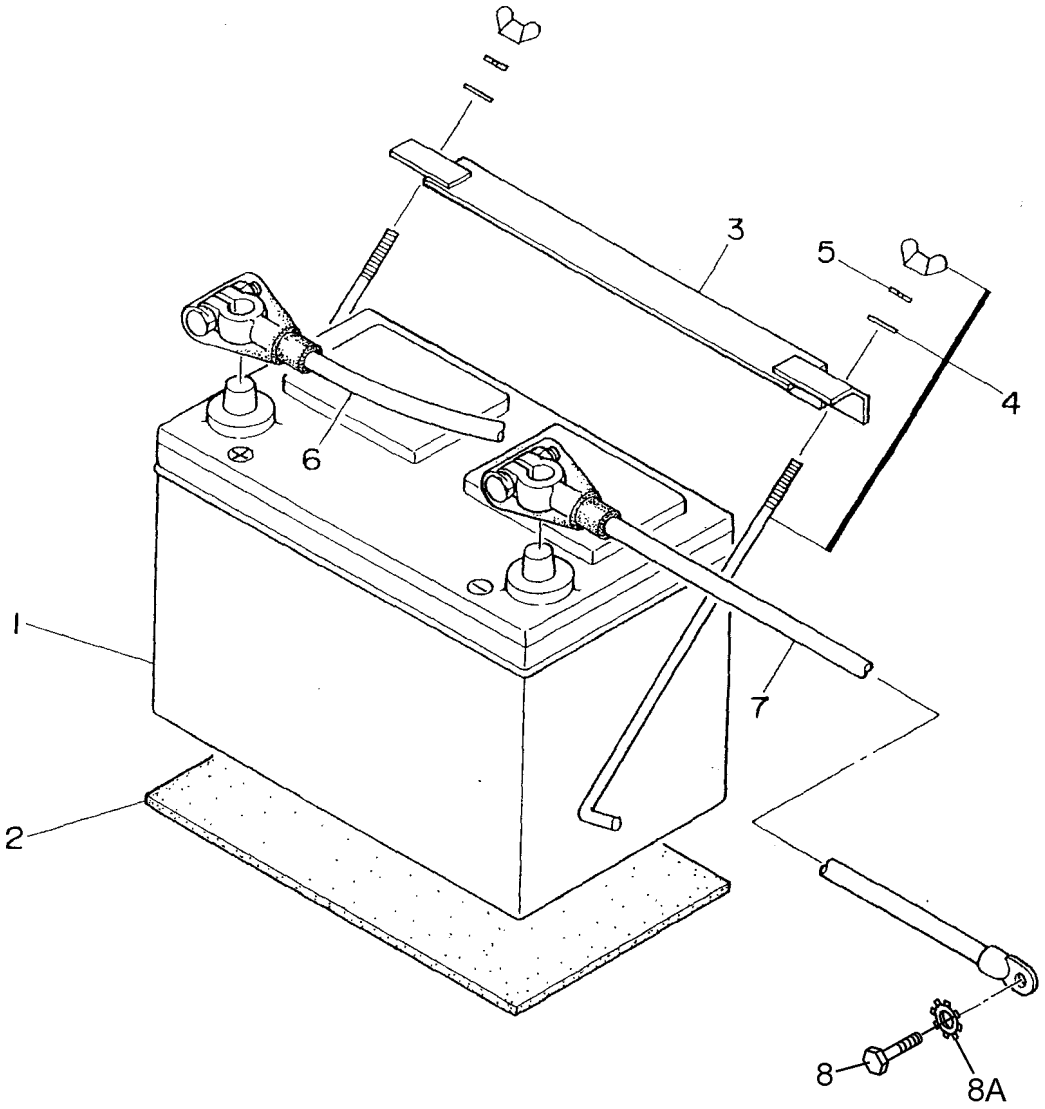
1
3
5
4
6
1
7
2
8
8A

BATTERY ASSY.

NO.	PART NO.	PART NAME	QTY.	REMARKS
1	0602220185	BATTERY	1	
2	B9310500014	BATTERY SHEET	1	
3	M9103000304	BATTERY BAND	1	
4	0602220920	BATTERY BOLT SET	2	
5	0040006000	WASHER, LOCK	2	
6	M1348400204	BATTERY CABLE	1	
7	M2346400104	BATTERY CABLE	1	
8	0016910020	HEX HEAD BOLT	1	
8A	0040510000	TOOTHED WASHER	1	

MUFFLER ASSY.

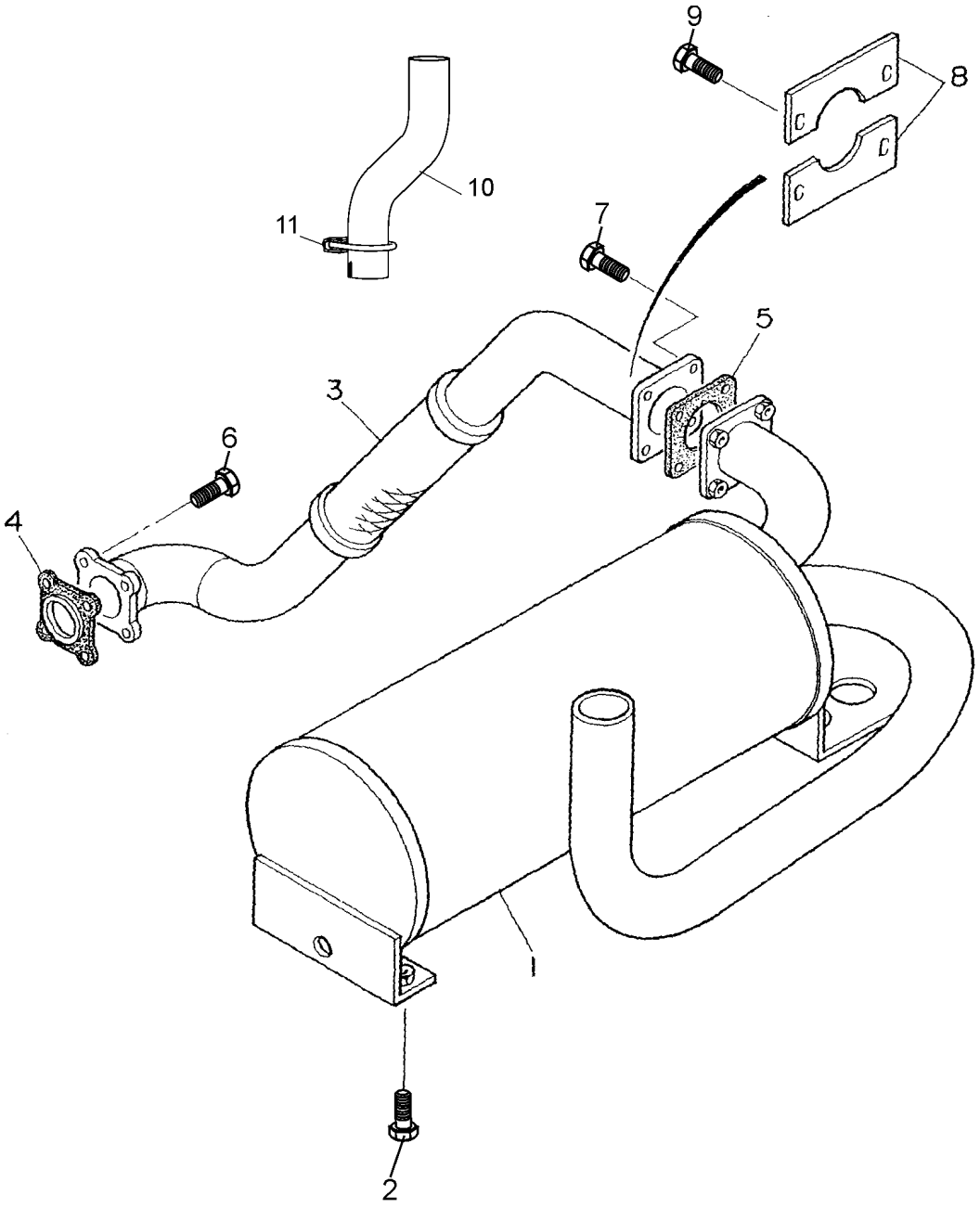

MUFFLER ASSY.

NO.	PART NO.	PART NAME	QTY.	REMARKS
1	M1330100803	MUFFLER	1	
2	0016908020	HEX HEAD BOLT	4	
3	M1333002803	EXHAUST PIPE	1	
4	8970420280	GASKET	1	REPLACES P/N 0602320100
5	M1333200014	GASKET	1	
6	0207008000	SELF- LOCKING NUT	4	
7	0016908035	HEX HEAD BOLT	4	
8	M1330400804	COVER	2	
9	0016906016	HEX HEAD BOLT	4	
10	49685	TUBE, EXHAUST EXTENSION	1	
11	12597	CLAMP, 2" MUFFLER SADDLE	1	

FUEL FILTER ASSY.

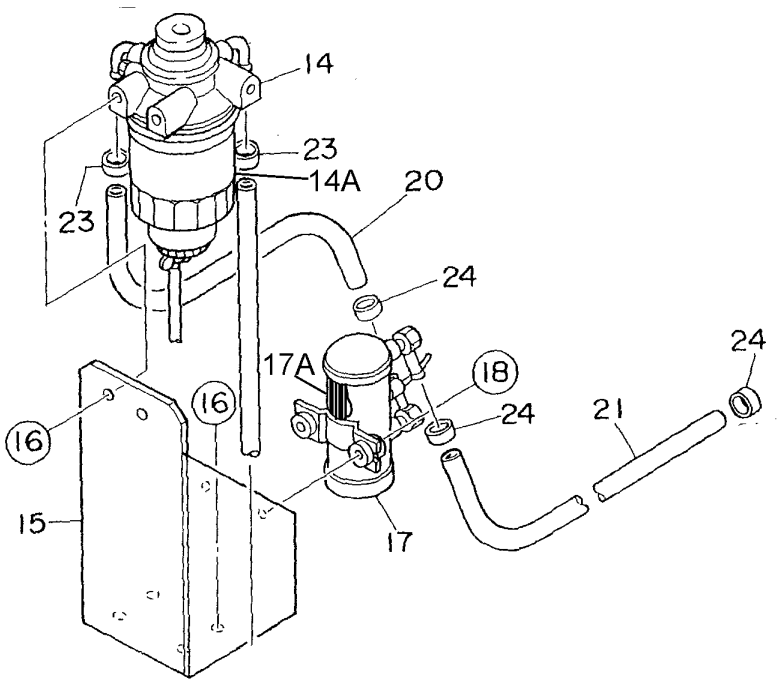

FUEL FILTER ASSY.

NO.	PART NO.	PART NAME	QTY.	REMARKS
14	8943672922	FUEL FILTER	1	
14A	8980374810	CARTRIDGE, FUEL FILTER	1	
15	M1366700104	BRACKET, FUEL FILTER	1	
16	0016908020	HEX HEAD BOLT	6	
17	8970398340	FUEL PUMP	1	
17A	8944370220	REPAIR KIT, FUEL PUMP	1	
18	0016906025	HEX HEAD BOLT	2	
20	0191200300	SUCTION HOSE	1	
21	0191200650	SUCTIONHOSE	1	
24	0605515198	HOSE BAND	3	

ENCLOSURE ASSY.

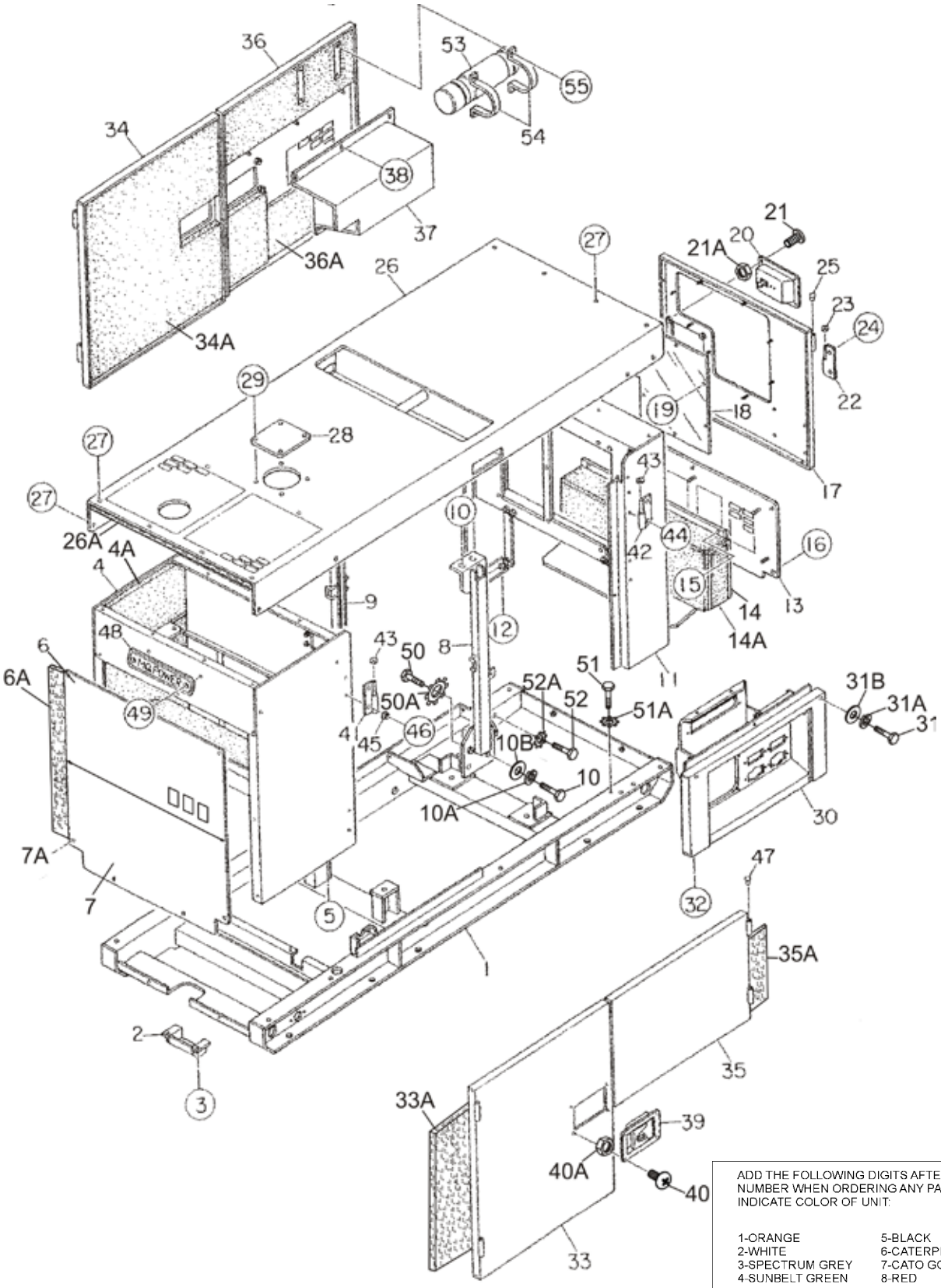

ADD THE FOLLOWING DIGITS AFTER THE PART NUMBER WHEN ORDERING ANY PAINTED PANEL TO INDICATE COLOR OF UNIT:

1-ORANGE	5-BLACK
2-WHITE	6-CATERPILLAR YELLOW
3-SPECTRUM GREY	7-CATO GOLD
4-SUNBELT GREEN	8-RED

THE SERIAL NUMBER MAY BE REQUIRED.

NO.	PART NO.	PART NAME	QTY.	REMARKS
1	M1413003302	BASE	1	
2	M1413400004	UNDER COVER	1	
3	0016908020	HEX HEAD BOLT	2	
4	M1423002302	FRONT FRAME	1	
4A	M1493104903	ACOUSTIC SHEET	1	
5	0016908020	HEX HEAD BOLT	4	
6	49756	PANEL,UPPER BALLAST COVER	1	
6A	60131	WEATHERSTRIP	12	1 PC = 1 FT.
7	49726	PANEL, LOWER BALLAST COVER	1	
7A	0019208020	HEX HEAD BOLT	11	
8	M1433000203	CENTER FRAME	1	
9	M1433000303	CENTER FRAME	1	
10	0010114030	HEX HEAD BOLT	8	
10A	0040014000	WASHER, LOCK	8	
11	M1443001602	REAR FRAME	1	
12	0016908020	HEX HEAD BOLT	4	
13	M1443301803	REAR COVER	1	
14	M1443301703	DUCT, REAR COVER	1	
14A	M1493303604	ACOUSTIC SHEET	1	
15	0207006000	SELF- LOCKING NUT	7	
16	0019208020	HEX HEAD BOLT	7	
17	M1443201103	REAR DOOR	1	
18	M1443600114	WINDOW PLATE	1	
19	0037906000	SELF- LOCKING U NUT	8	
19A	0041206000	WASHER, FLAT	8	
20	M9113000002	DOOR HANDLE ASSY	1	
21	0021806016	MACHINE SCREW	4	
22	M9110100204	HINGE	2	
23	M9116100004	WASHER	2	
24	0019208020	HEX HEAD BOLT	4	
25	M9310000004	BLIND PLUG	2	
26	M1463002202	ROOF PANEL	1	
26A	M14935020903	ACOUSTIC SHEET	1	
27	0019208020	HEX HEAD BOLT	18	
28	M3310600004	ROOF COVER	1	
29	0019208020	HEX HEAD BOLT	4	
30	M1453200902	SPLASHER PANEL	1	
31	0019108055	HEX HEAD BOLT	2	
31A	0042308000	WASHER, LOCK	2	
31B	0042408000	WASHER, FLAT	2	
32	0016908020	HEX HEAD BOLT	2	
33	M1453003803	SIDE DOOR	1	
33A	M1493405604	ACOUSTIC SHEET	1	
34	M1453003903	SIDE DOOR	1	
34A	M1493405704	ACOUSTIC SHEET	1	

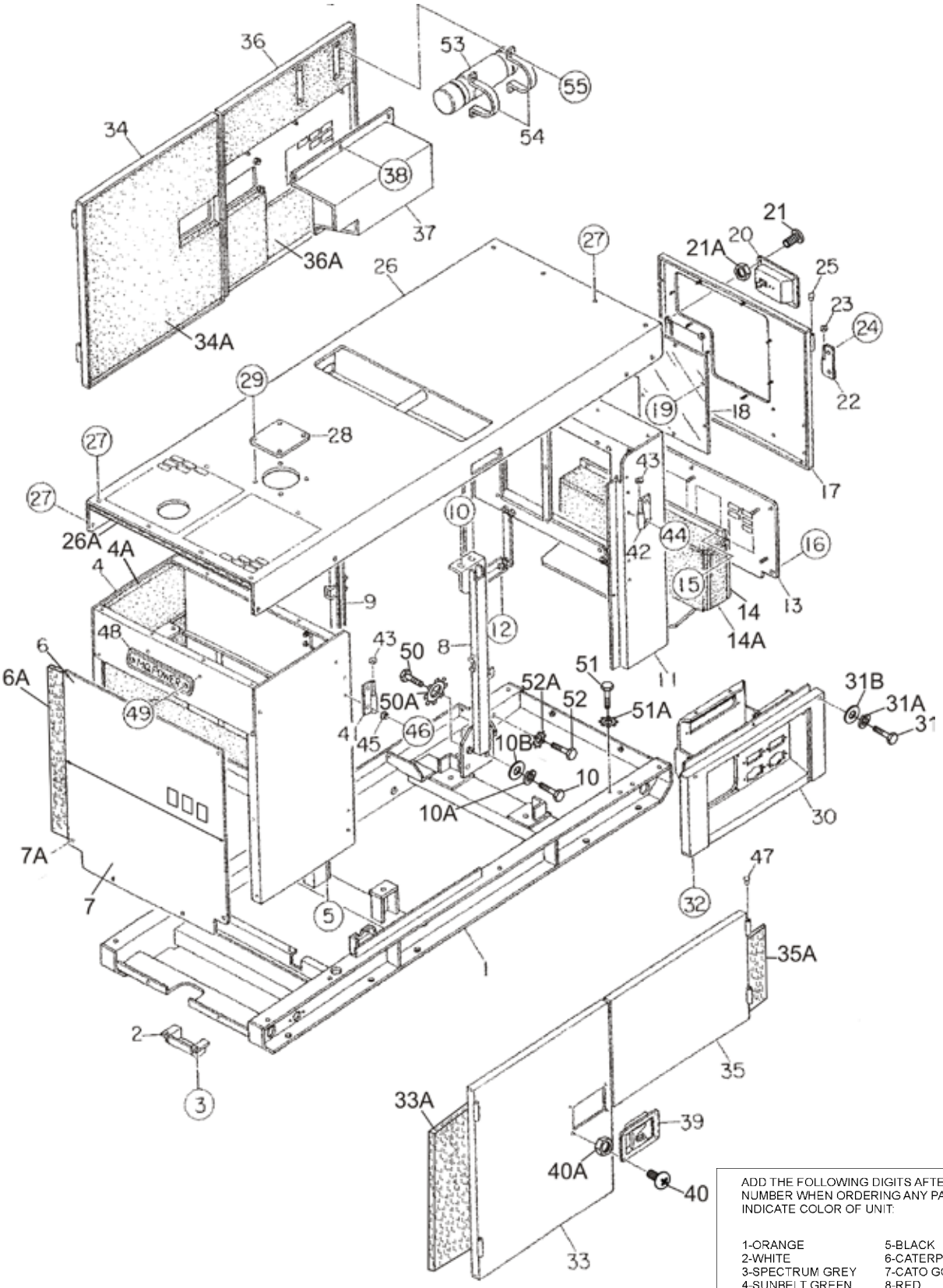

ADD THE FOLLOWING DIGITS AFTER THE PART NUMBER WHEN ORDERING ANY PAINTED PANEL TO INDICATE COLOR OF UNIT:

1-ORANGE	5-BLACK
2-WHITE	6-CATERPILLAR YELLOW
3-SPECTRUM GREY	7-CATO GOLD
4-SUNBELT GREEN	8-RED

THE SERIAL NUMBER MAY BE REQUIRED.

NO.	PART NO.	PART NAME	QTY.	REMARKS
35	M1453004003	SIDE DOOR	1	
35A	M1493405804	ACOUSTIC SHEET	1	
36	M1453004703	SIDE DOOR	1	
36A	M1493409404	ACOUSTIC SHEET	1	
37	M1453301403	DUCT	1	
38	0207006000	SELF- LOCKING NUT	6	
39	M9113000002	DOOR HANDLE ASSY	3	
40	0021806016	MACHINE SCREW	12	
40A	0030006000	HEX HEAD NUT	12	
41	M9110100204	HINGE	4	
42	M9110100304	HINGE	4	
43	M9116100004	WASHER	8	
44	0019208020	HEX HEAD BOLT	9	
45	0601850097	DOOR STOPPER	8	
46	0027208025	MACHINE SCREW	8	
47	M99310000004	BLIND PLUG	8	
48	0600500090	EMBLEM	1	
49	0021106016	MACHINE SCREW	2	
50	0016910020	HEX HEAD BOLT	1	
50A	0040510000	TOOTHED WASHER	1	
51	0016908020	HEX HEAD BOLT	1	
51A	0040508000	TOOTHED WASHER	1	
52	0016906020	HEX HEAD BOLT	1	
52A	0040506000	TOOTHED WASHER	1	
53	0600800321	MANUAL - PAK	1	
54	M1483600804	BOX CLAMPER	2	
55	0016906016	HEX HEAD BOLT	4	

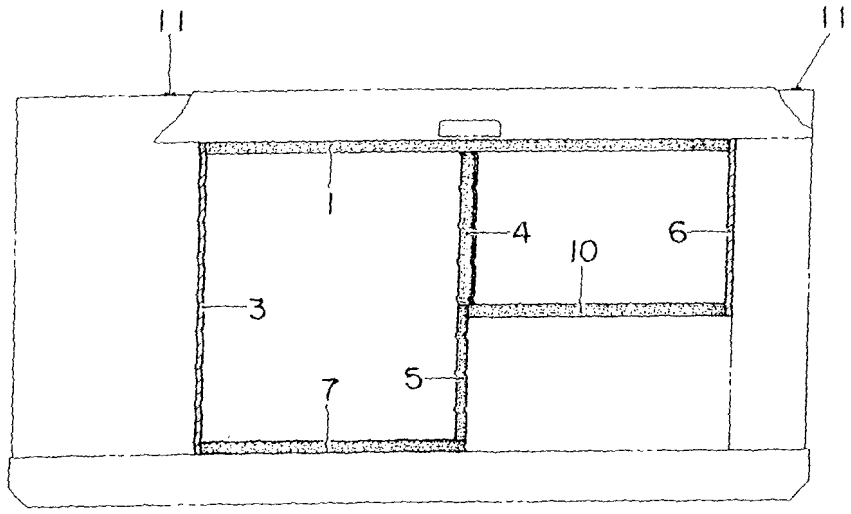
11
11
1
4
6
10
3
5
7

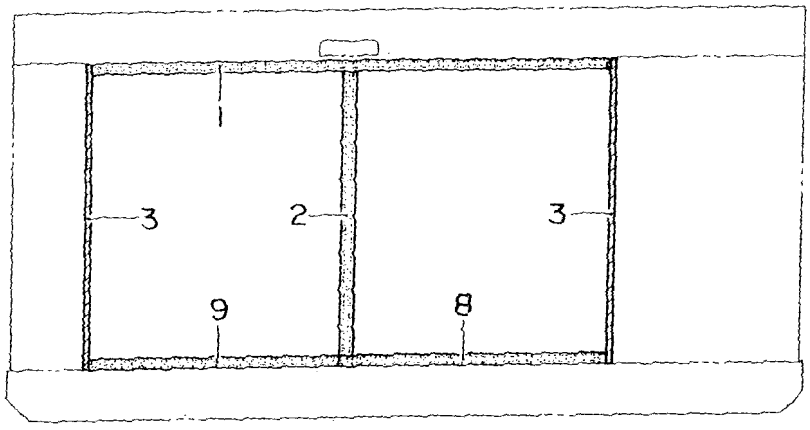
1
3
2
3
9
8

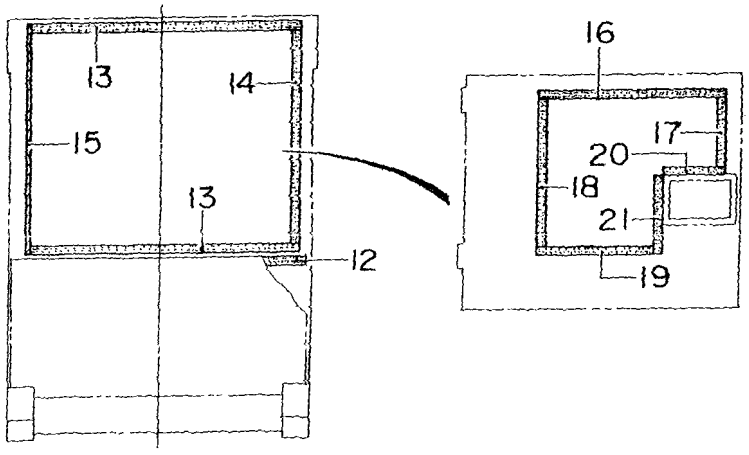
16
13
14
15
17
20
18
13
21
12
19

RUBBER SEALS ASSY.

NO.	PART NO.	PART NAME	QTY.	REMARKS
1	0228901150	SEAL RUBBER	2	
2	0228900695	SEAL RUBBER	1	
3	0229400755	SEAL RUBBER	3	
4	M1490300004	SEAL RUBBER	1	
5	0228800325	SEAL RUBBER	1	
6	0229400430	SEAL RUBBER	1	
7	0228900540	SEAL RUBBER	1	
8	0228900550	SEAL RUBBER	1	
9	0229200595	SEAL RUBBER	1	
10	0228900610	SEAL RUBBER	1	
11	0229200750	SEAL RUBBER	2	
12	0229200740	SEAL RUBBER	1	
13	0228800670	SEAL RUBBER	2	
14	0228800525	SEAL RUBBER	1	
15	0228800565	SEAL RUBBER	1	
16	0228100458	SEAL RUBBER	1	
17	0228100171	SEAL RUBBER	1	
18	0228100351	SEAL RUBBER	1	
19	0228100285	SEAL RUBBER	1	
20	0228100153	SEAL RUBBER	1	
21	0228100180	SEAL RUBBER	1	

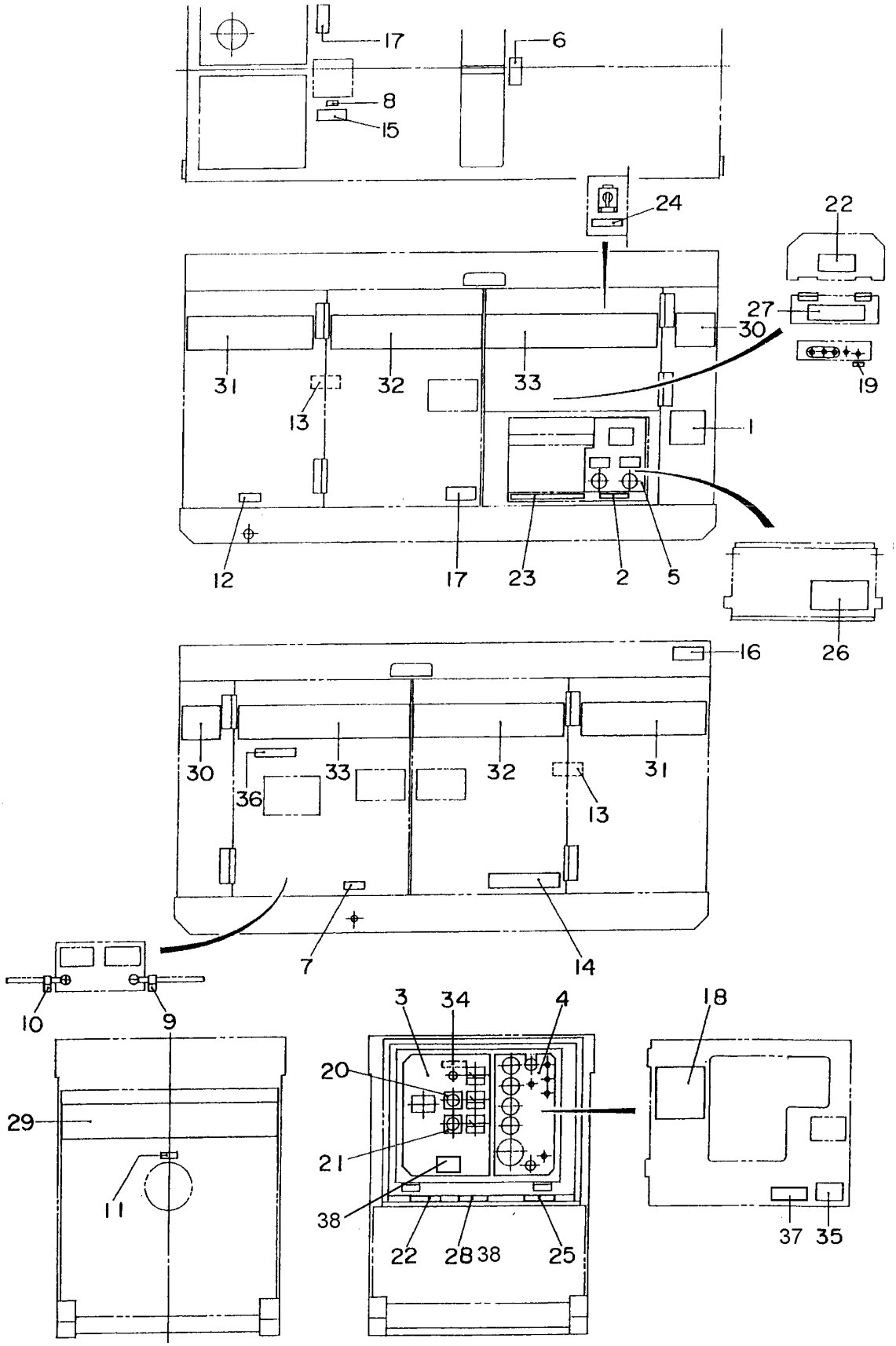
17
6
8
15
24
22
27
30
31
32
33
19
13
1
12
17
23
2
5
26
16
30
33
36
32
31
13
7
14
10
9
3
34
4
18
20
29
21
11
38
22
28
38
25
37
35

NO.	PART NO.	PART NAME	QTY.	REMARKS
1	M1550000104	DECAL : NOTE	1	M15000010
2	M1550000204	DECAL : NOTE	1	M15000020
3	M1550003312	DECAL : GENERATOR CONTROL	1	M15000330
4	M1550003412	DECAL : ENGINE OPERATING	1	M15000340
5	M1550001803	DECAL : AUXILIARY OUTPUT	1	M15000180
6	M1550001904	DECAL : CAUTION	1	M15000190
7	M9500000004	DECAL : OIL DRAIN PLUG	1	M90000000
8	M9500100004	DECAL : WATER	1	M90010000
9	M9500300004	DECAL : -	1	M90030000
10	M9500300104	DECAL : +	1	M90030010
11	M9500500304	DECAL : DIESEL FUEL	1	M90050030
12	M9500500104	DECAL : FUEL DRAIN PLUG	1	M90050010
13	M9503000004	DECAL : WARNING	2	M90300000
14	M9503000103	DECAL : WATER - OIL CHECK	1	M90300010
15	M9503100004	DECAL : WARNING	1	M90310000
16	M9503200004	DECAL : WARNING	1	M90320000
17	M9510100004	DECAL : CAUTION	2	M91010000
18	M9510200002	DECAL : MQ	1	M91020000
19	M9520000004	DECAL : GROUND	1	M92000000
20	M9520000104	DECAL : AMMETER CHANGE - OVER SWITCH	1	M92000010
21	M9520000204	DECAL : VOLTMETER CHANGE- OVER SWITCH	1	M92000020
22	M9520100004	DECAL : WARNING	2	M92010000
23	M9520100504	DECAL : WARNING	1	M92010050
24	M9520100204	DECAL : CAUTION	1	M92010020A
25	M9520100304	DECAL : SAFETY INSTRUCTIONS	1	M92010030
26	M9520100404	DECAL : DANGER	1	M92010040
27	M9520200003	DECAL : CONNECTION OF OUTPUT CABLE	1	M92020000
28	M9520200404	DECAL : OVER CURRENT RELAY	1	M92020040
29	M1560100403	STRIPE : WHISPERWATT	1	
30	M1560100504	STRIPE : 25	2	
31	M1560101604	DECAL : MQ POWER	2	
32	M1560101704	STRIPE	2	
33	M1560101804	STRIPE	2	
34	M9521000004	DECAL : TERMINAL	1	
35	M9503200104	DECAL : DANGER	1	M90320010
36	M9510000104	DECAL : DOCUMENT BOX LOCATED	1	M91000010
37	M9504200004	DECAL: WARNING START FIRES	1	M90420000
38	49712	DECAL: VOLTAGE ADJUST	1	

PAYMENT TERMS

Terms of payment for parts are net 30 days.

FREIGHT POLICY

All parts orders will be shipped collect or prepaid with the charges added to the invoice. All shipments are F.O.B. point of origin. Multiquip's responsibility ceases when a signed manifest has been obtained from the carrier, and any claim for shortage or damage must be settled between the consignee and the carrier.

MINIMUM ORDER

The minimum charge for orders from Multiquip is $15.00 net. Customers will be asked for instructions regarding handling of orders not meeting this requirement.

RETURNED GOODS POLICY

Return shipments will be accepted and credit will be allowed, subject to the following provisions:

1. A Returned Material Authorization must be approved by Multiquip prior to shipment.
2. To obtain a Return Material Authorization, a list must be provided to Multiquip Parts Sales that defines item numbers, quantities, and descriptions of the items to be returned.
    a. The parts numbers and descriptions must match the current parts price list.
    b. The list must be typed or computer generated.
    c. The list must state the reason(s) for the return.
    d. The list must reference the sales order(s) or invoice(s) under which the items were originally purchased.
    e. The list must include the name and phone number of the person requesting the RMA.
3. A copy of the Return Material Authorization must accompany the return shipment.
4. Freight is at the sender's expense. All parts must be returned freight prepaid to Multiquip's designated receiving point.
5. Parts must be in new and resalable condition, in the original Multiquip package (if any), and with Multiquip part numbers clearly marked.
6. The following items are not returnable:
    a. Obsolete parts. (If an item is in the price book and shows as being replaced by another item, it is obsolete.)
    b. Any parts with a limited shelf life (such as gaskets, seals, "O" rings, and other rubber parts) that were purchased more than six months prior to the return date.
    c. Any line item with an extended dealer net price of less than $5.00.
    d. Special order items.
    e. Electrical components.
    f. Paint, chemicals, and lubricants.
    g. Decals and paper products.
    h. Items purchased in kits.
7. The sender will be notified of any material received that is not acceptable.
8. Such material will be held for five working days from notification, pending instructions. If a reply is not received within five days, the material will be returned to the sender at his expense.
9. Credit on returned parts will be issued at dealer net price at time of the original purchase, less a 15% restocking charge.
10. In cases where an item is accepted, for which the original purchase document can not be determined, the price will be based on the list price that was effective twelve months prior to the RMA date.
11. Credit issued will be applied to future purchases only.

PRICING AND REBATES

Prices are subject to change without prior notice. Price changes are effective on a specific date and all orders received on or after that date will be billed at the revised price. Rebates for price declines and added charges for price increases will not be made for stock on hand at the time of any price change.

Multiquip reserves the right to quote and sell direct to Government agencies, and to Original Equipment Manufacturer accounts who use our products as integral parts of their own products.

SPECIAL EXPEDITING SERVICE

A $35.00 surcharge will be added to the invoice for special handling including bus shipments, insured parcel post or in cases where Multiquip must personally deliver the parts to the carrier.

LIMITATIONS OF SELLER'S LIABILITY

Multiquip shall not be liable hereunder for damages in excess of the purchase price of the item with respect to which damages are claimed, and in no event shall Multiquip be liable for loss of profit or good will or for any other special, consequential or incidental damages.

LIMITATION OF WARRANTIES

No warranties, express or implied, are made in connection with the sale of parts or trade accessories nor as to any engine not manufactured by Multiquip. Such warranties made in connection with the sale of new, complete units are made exclusively by a statement of warranty packaged with such units, and Multiquip neither assumes nor authorizes any person to assume for it any other obligation or liability whatever in connection with the sale of its products. Apart from such written statement of warranty, there are no warranties, express, implied or statutory, which extend beyond the description of the products on the face hereof.

Effective: February 22, 2006

OPERATION AND PARTS MANUAL

HERE'S HOW TO GET HELP

PLEASE HAVE THE MODEL AND SERIAL NUMBER ON-HAND WHEN CALLING

UNITED STATES

Multiquip Corporate Office

18910 Wilmington Ave.
Carson, CA 90746
Contact: mq@multiquip.com

Tel. (800) 421-1244
Fax (310) 537-3927

MQ Parts Department

800-427-1244
310-537-3700

Fax: 800-672-7877
Fax: 310-637-3284

Service Department

800-421-1244
310-537-3700

Fax: 310-537-4259

Warranty Department

800-421-1244
310-537-3700

Fax: 310-943-2249

Technical Assistance

800-478-1244

Fax: 310-943-2238

MEXICO

MQ Cipsa

Carr. Fed. Mexico-Puebla KM 126.5
Momoxpan, Cholula, Puebla 72760 Mexico
Contact: pmastretta@cipsa.com.mx

Tel: (52) 222-225-9900
Fax: (52) 222-285-0420

UNITED KINGDOM

Multiquip (UK) Limited Head Office

Unit 2, Northpoint Industrial Estate,
Globe Lane,
Dukinfield, Cheshire SK16 4UJ
Contact: sales@multiquip.co.uk

Tel: 0161 339 2223
Fax: 0161 339 3226

CANADA

Multiquip

4110 Industriel Boul.
Laval, Quebec, Canada H7L 6V3
Contact: jmartin@multiquip.com

Tel: (450) 625-2244
Tel: (877) 963-4411
Fax: (450) 625-8664

© COPYRIGHT 2013, MULTIQUIP INC.

Multiquip Inc, the MQ logo are registered trademarks of Multiquip Inc. and may not be used, reproduced, or altered without written permission. All other trademarks are the property of their respective owners and used with permission.

This manual MUST accompany the equipment at all times. This manual is considered a permanent part of the equipment and should remain with the unit if resold.

The information and specifications included in this publication were in effect at the time of approval for printing. Illustrations, descriptions, references and technical data contained in this manual are for guidance only and may not be considered as binding. Multiquip Inc. reserves the right to discontinue or change specifications, design or the information published in this publication at any time without notice and without incurring any obligations.

Your Local Dealer is:

MULTIQUIP®

PN 49810